PEDROLLO®
... the spring of life

PEDROLLO S.p.A.
Via Enrico Fermi 7
37047 San Bonifacio (Verona) ITALY
paid-up capital € 40.000.000,00

Tel. +39 045 6136311
Fax +39 045 7614663

e-mail: sales@pedrollo.com
www.pedrollo.com

Index

PEDROLLO ... the spring of life

Pedrollo S.p.A. was founded in 1974. Having grown over the years to assume an international character, the company is now recognised as one of the world leaders in the domestic pump sector.
Currently the company covers an area of 80.000 m^2 and is characterised by its highly automated production process.
The constant quality control of the entire production cycle and the use of the most advanced technological solutions available guarantees that the products are of an extremely high quality.
Thanks to the use of the most sophisticated robots and advanced production lines available, the company is capable of producing over 2.000.000 pumps a year from a range covering over 100 different families of pumps.

PEDROLLO®
... the spring of life


PEDROLLO

Pedrollo pumps are sold in over 160 countries worldwide via a sales network capable of offering its clients the choice from a vast range of products suitable for most domestic, civil, agricultural and industrial applications.
An international sales team, composed of professionals from various parts of the world, ensures that the client is able to count on an extremely high level of service and personalised advice regarding the best solution to adopt.
The research and design department is equipped with the most advanced hardware and software available.
A modern laboratory where hydraulic tests take place, workstations where fluid-dynamic and finite element analysis is carried out, together with creativity and passion, all combine to produce new pumps and to continually improve the existing range with particular attention being paid to sturdiness and low energy consumption, thus providing each and every client with a simple and reliable product capable of providing surprising levels of performance.

PEDROLLO®
... the spring of life

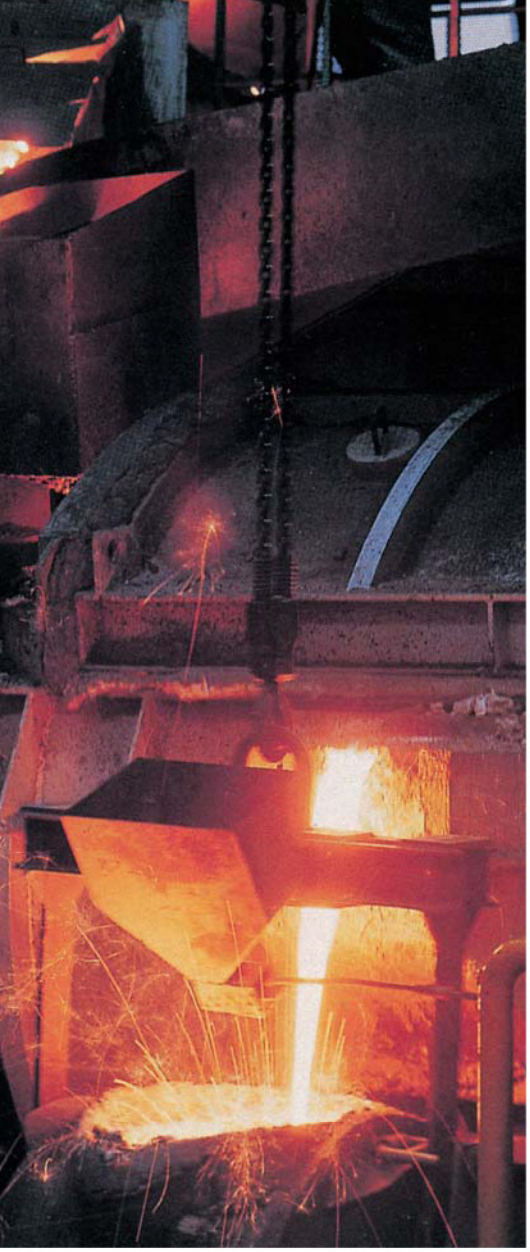

All major components are manufactured 'in house' by Pedrollo.
Starting with raw materials, the foundry, machine shop, sheet metal works and motor winding facilities, under the guidance of our QA Inspectors, produce high quality precision components at all times.

PEDROLLO®
... the spring of life

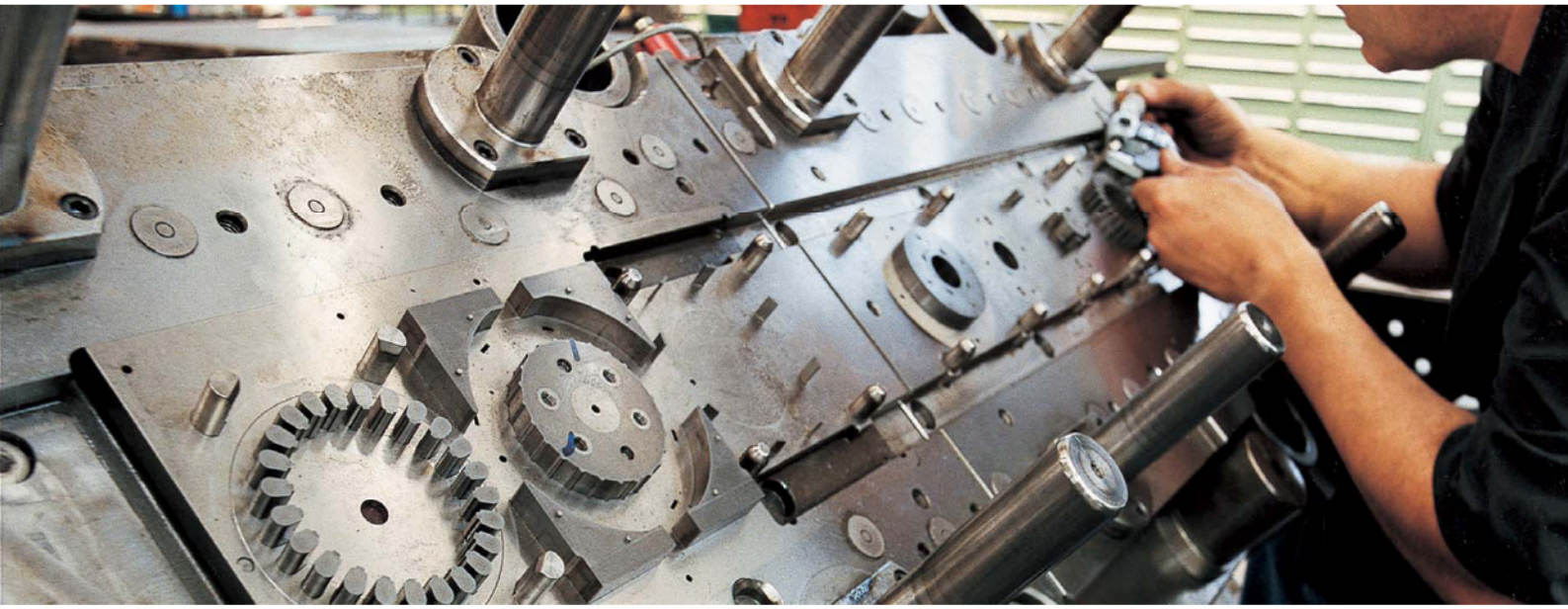

The final assembly of our pumps takes place on automated assembly lines, capable of providing a high assembly quality while carrying out automated tests at the same time, thus ensuring that the final product is produced in the shortest time possible.

PEDROLLO®
... the spring of life

Before approval is given for the production of a new pump, all new models are tested in our laboratory.
Fitted with a rig capable of reproducing the most strenuous of working conditions, the laboratory allows us to test the success of the design process.

PEDROLLO®
... the spring of life

PEDROLLO®
... the spring of life

PK

Pumps with peripheral impeller

PERFORMANCE RANGE

- Flow rate up to **90 l/min** (5.4 m^3/h)
- Head up to **100 m**

APPLICATION LIMITS

- Manometric suction lift up to **8 m**
- Liquid temperature between **-10 °C** and **+60 °C**
- Ambient temperature up to **+40 °C**
- Max. working pressure:
  - **6.5 bar** for PK 60-65-70-80
  - **10 bar** for PK 90-100-200-300
- Continuous service **S1**

CONSTRUCTION AND SAFETY STANDARDS

EN 60335-1	**EN 60034-1**
IEC 60335-1	**IEC 60034-1**
CEI 61-150	**CEI 2-3**

CERTIFICATIONS

АИЗО

УкрТЕСТ-003

INSTALLATION AND USE

Suitable for use with clean water that does not contain abrasive particles and liquids that are not chemically aggressive towards the materials from which the pump is made.
Thanks to their reliability, the fact that they are easy to use and are economical, they are ideal for domestic use and in particular for distributing water in combination with small pressure sets and for the irrigation of gardens and allotments.
The pump should be installed in an enclosed environment, or at least sheltered from inclement weather.

PATENTS - TRADE MARKS - MODELS

- Motor bracket: patent n° IT1243605
  (reduces the risk of the impeller locking after long periods of inactivity)
- PKm 60® is a registered trade mark
- Registered Italian model n° 72753

OPTIONALS AVAILABLE ON REQUEST

- Special mechanical seal
- Other voltages or 60 Hz frequency
- IP55 class protection

GUARANTEE

2 years subject to terms and conditions

CHARACTERISTIC CURVES AND PERFORMANCE DATA

50 Hz n= 2900 1/min HS= 0 m

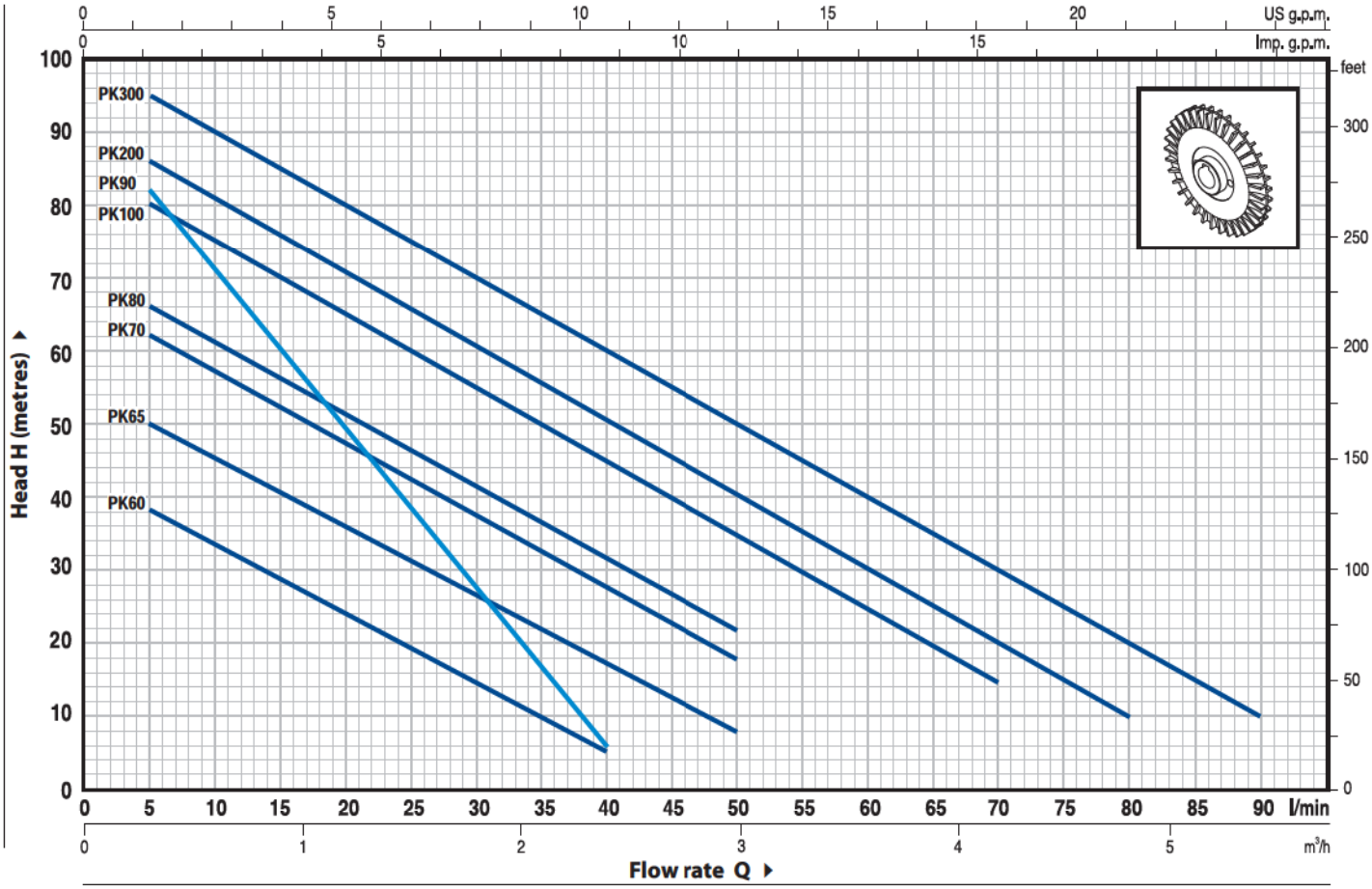

MODEL		POWER		Q m³/h	0	0.3	0.6	0.9	1.2	1.5	1.8	2.1	2.4	3.0	3.6	4.2	4.8	5.4
Single-phase	Three-phase	kW	HP	Q l/min	**0**	**5**	**10**	**15**	**20**	**25**	**30**	**35**	**40**	**50**	**60**	**70**	**80**	**90**
PKm 60®	**PK 60®**	0.37	0.50	H metres	40	38	33.5	29	24	19.5	15	10	5					
PKm 65	**PK 65**	0.50	0.70		55	50	45.5	40.5	36	31	27	22	17	8				
PKm 70	**PK 70**	0.60	0.85		65	62	57	52	47	42	37	32	27	18				
PKm 80	**PK 80**	0.75	1		70	66	61	56	51	46	41	36.5	31	22				
PKm 90	**PK 90**	0.75	1		90	82	71	60	49	38	27	17	5					
PKm 100	**PK 100**	1.1	1.5		85	80	75	70	65	60	55	50	45	35	25	15		
PKm 200	**PK 200**	1.5	2		90	86	81	76	71	65.5	60	55	50	40	30	20	10	
–	**PK 300**	2.2	3		100	95	90	85	80	75	70	65	60	50	40	30	20	10

Q = Flow rate **H** = Total manometric head **HS** = Suction height

Tolerance of characteristic curves in compliance with EN ISO 9906 App. A.

POS.	COMPONENT	CONSTRUCTION CHARACTERISTICS
1	PUMP BODY	Cast iron, complete with threaded ports in compliance with ISO 228/1
2	MOTOR BRACKET	Aluminium with brass insert (patented), reduces the risk of impeller seizure
3	IMPELLER	Brass, with peripheral radial vanes
4	MOTOR SHAFT	Stainless steel EN 10088-3 - 1.4104

5 MECHANICAL SEAL

Pump	*Seal*	*Shaft*	*Materials*		
Model	*Model*	*Diameter*	*Stationary ring*	*Rotational ring*	*Elastomer*
PK 60-65-70-80	**AR-12**	**Ø 12** mm	Ceramic	Graphite	NBR
PK 90	**FN-12**	**Ø 12** mm	Ceramic	Graphite	NBR
PK 100-200-300	**FN-14**	**Ø 14** mm	Graphite	Ceramic	NBR

6 BEARINGS

Pump	*Model*
PK 60-65	**6201 ZZ / 6201 ZZ**
PK 70-80-90	**6203 ZZ / 6203 ZZ**
PK 100-200-300	**6204 ZZ / 6204 ZZ**

7 CAPACITOR

Pump	*Capacitance*	
Single-phase	*(230 V or 240 V)*	*(110 V)*
PKm 60	**10** µF 450 VL	**25** µF 250 VL
PKm 65	**14** µF 450 VL	**30** µF 250 VL
PKm 70	**16** µF 450 VL	**60** µF 300 VL
PKm 80	**20** µF 450 VL	**60** µF 300 VL
PKm 90	**20** µF 450 VL	**60** µF 300 VL
PKm 100	**31.5** µF 450 VL	**60** µF 250 VL
PKm 200	**45** µF 450 VL	**80** µF 250 VL

8 ELECTRIC MOTOR

PKm: single-phase 230 V - 50 Hz with thermal overload protector built-in to the winding.
PK: three-phase 230/400 V - 50 Hz.

➡ **Pumps fitted with the three-phase motor option offer IE2 (IEC 60034-30) class high performance**

– Insulation: F class.
– Protection: IP 44.

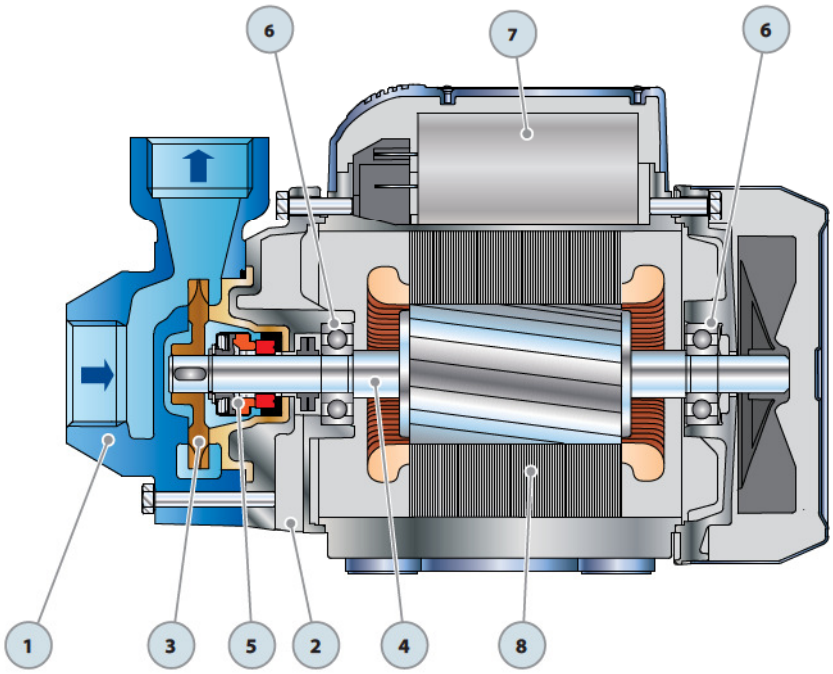

DIMENSIONS AND WEIGHT

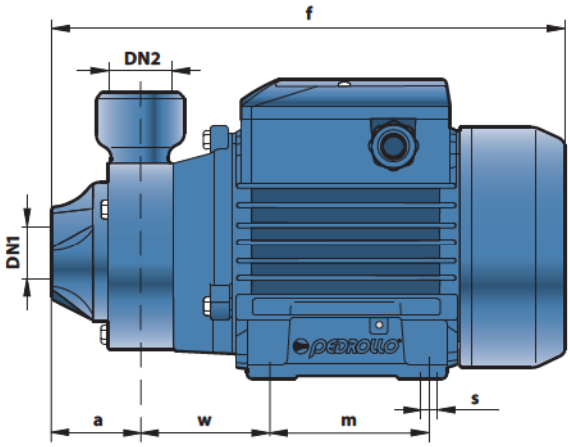

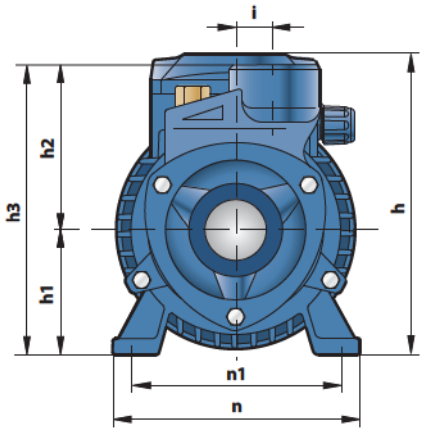

MODEL		PORTS		DIMENSIONS mm												kg	
Single-phase	Three-phase	DN1	DN2	a	f	h	h1	h2	h3	i	m	n	n1	w	s	1~	3~
PKm 60®	PK 60®	1″	1″	42	245	152	63	75	138	20	80	120	100	55	7	**5.3**	**5.3**
PKm 65	PK 65							80	143							**6.9**	**6.4**
PKm 70	PK 70			55	285	180	71	85	156		90	140	112	62		**10.1**	**9.0**
PKm 80	PK 80															**10.1**	**9.0**
PKm 90	PK 90	¾″	¾″	58	282			95	166							**10.2**	**9.2**
PKm 100	PK 100	1″	1″	55	350	212	80	94	174		100	164	125	85	9	**14.4**	**12.4**
PKm 200	PK 200															**15.5**	**13.4**
–	PK 300															**–**	**15.6**

ABSORPTION

MODEL	VOLTAGE (single-phase)		
Single-phase	230 V	240 V	110 V
PKm 60®	**2.5** A	**2.4** A	**5.5** A
PKm 65	**3.7** A	**3.4** A	**7.4** A
PKm 70	**5.2** A	**4.8** A	**10.8** A
PKm 80	**5.2** A	**4.8** A	**10.8** A
PKm 90	**5.6** A	**5.1** A	**11.5** A
PKm 100	**9.0** A	**8.2** A	**18.0** A
PKm 200	**11.5** A	**11.0** A	**24.0** A

MODEL	VOLTAGE (three-phase)				
Three-phase	230 V	400 V	690 V	240 V	415 V
PK 60®	**2.0** A	**1.15** A	–	**1.9** A	**1.1** A
PK 65	**3.0** A	**1.7** A	–	**2.8** A	**1.6** A
PK 70	**3.8** A	**2.2** A	–	**3.3** A	**1.9** A
PK 80	**3.8** A	**2.2** A	–	**3.3** A	**1.9** A
PK 90	**4.0** A	**2.3** A	–	**3.8** A	**2.2** A
PK 100	**6.2** A	**3.6** A	**2.05** A	**5.7** A	**3.3** A
PK 200	**7.6** A	**4.4** A	**2.5** A	**7.0** A	**4.0** A
PK 300	**9.3** A	**5.4** A	**3.15** A	**8.7** A	**5.0** A

PALLETIZATION

MODEL		GROUPAGE				CONTAINER			
		n°	H	kg		n°	H	kg	
Single-phase	Three-phase	pumps	(mm)	1~	3~	pumps	(mm)	1~	3~
PKm 60®	PK 60®	**216**	1420	1170	1170	**324**	2050	1740	1740
PKm 65	PK 65	**216**	1440	1510	1400	**243**	1600	1700	1580
PKm 70	PK 70	**120**	1300	1230	1100	**180**	1870	1840	1640
PKm 80	PK 80	**120**	1300	1230	1100	**180**	1870	1840	1640
PKm 90	PK 90	**120**	1300	1250	1130	**180**	1870	1860	1680
PKm 100	PK 100	**72**	1520	1060	910	**84**	1750	1230	1060
PKm 200	PK 200	**72**	1520	1140	990	**84**	1750	1320	1150
–	PK 300	**72**	1520	–	1140	**84**	1750	–	1330

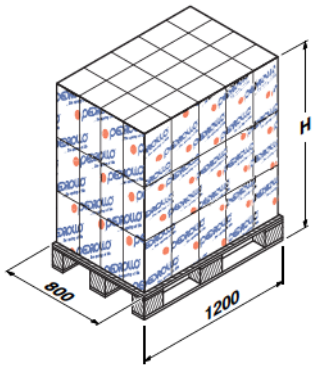

PKS

Self-priming pumps with peripheral impeller

PERFORMANCE RANGE

- Flow rate up to **50 l/min** (3 m^3/h)
- Head up to **70 m**

APPLICATION LIMITS

- Manometric suction lift up to **9 m** (HS)
- Liquid temperature between **-10 °C** and **+60 °C**
- Ambient temperature up to **+40 °C**
- Max. working pressure **6.5 bar**
- Continuous service **S1**

CONSTRUCTION AND SAFETY STANDARDS

EN 60335-1	**EN 60034-1**
IEC 60335-1	**IEC 60034-1**
CEI 61-150	**CEI 2-3**

CERTIFICATIONS

АИ30

УкрТЕСТ-003

INSTALLATION AND USE

Suitable for use with clean water that does not contain abrasive particles and liquids that are not chemically aggressive towards the materials from which the pump is made.
As a result of their compactness, reliability and the fact that they are easy to use, they are suitable for use in domestic applications such as the distribution of water in combination with small pressure sets, for the irrigation of gardens and allotments, for drawing water from tanks and for all those other situations where air or water may be present in the water to be pumped. The pump comes complete with a flap-check valve.
The pump should be installed in an enclosed environment, or at least sheltered from inclement weather.

PATENTS - TRADE MARKS - MODELS

- Motor bracket: patent n° IT1243605
- Registered Italian model n° 72753

OPTIONALS AVAILABLE ON REQUEST

- Special mechanical seal
- Other voltages or 60 Hz frequency
- IP55 class protection

GUARANTEE

2 years subject to terms and conditions

CHARACTERISTIC CURVES AND PERFORMANCE DATA

50 Hz n= 2900 1/min HS= 0 m

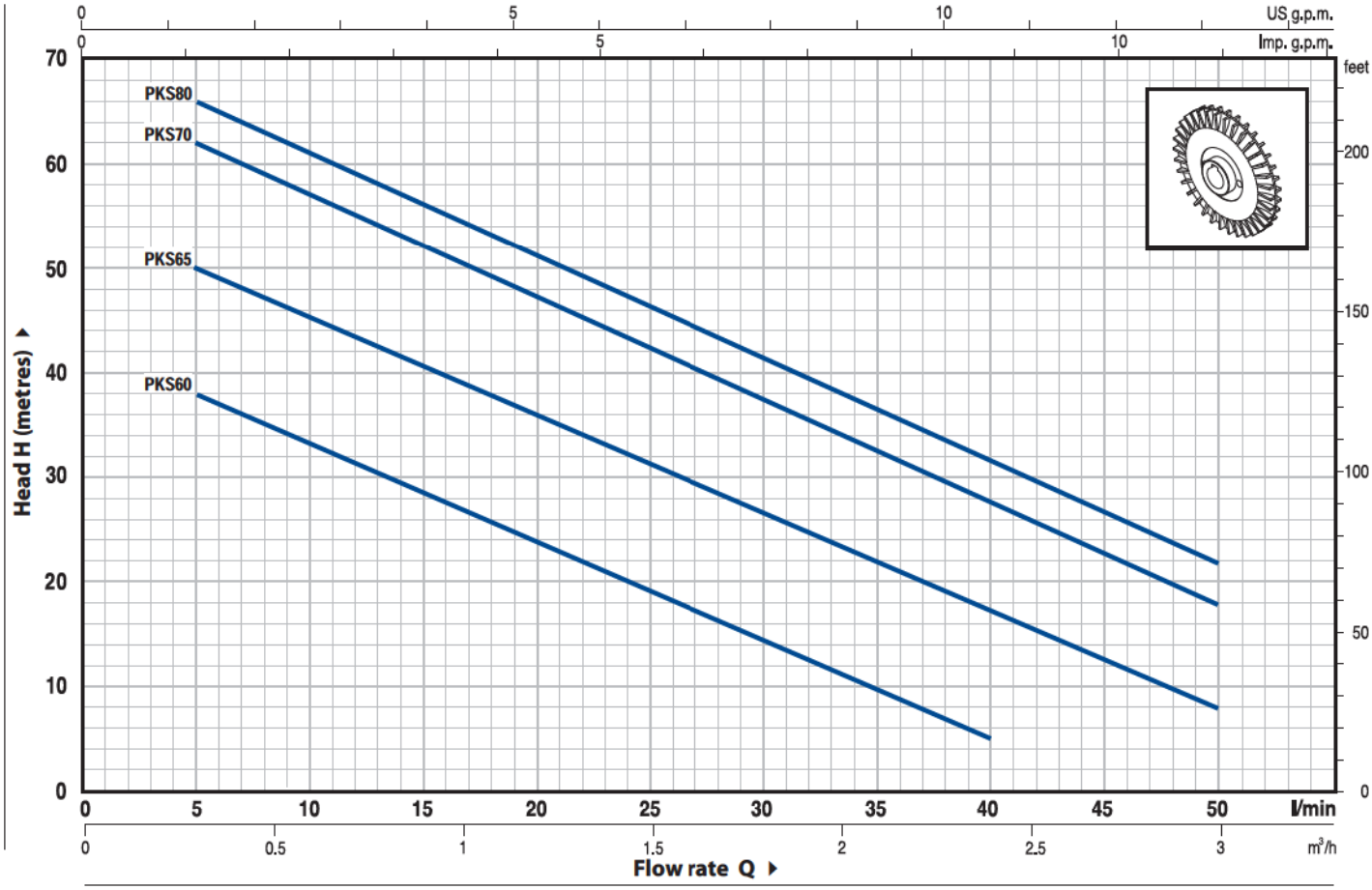

MODEL		POWER		Q m³/h	0	0.3	0.6	0.9	1.2	1.5	1.8	2.1	2.4	2.7	3.0
Single-phase	Three-phase	kW	HP	Q l/min	**0**	**5**	**10**	**15**	**20**	**25**	**30**	**35**	**40**	**45**	**50**
PKSm 60	**PKS 60**	0.37	0.50	H metres	40	38	33.5	29	24	19.5	15	10	5		
PKSm 65	**PKS 65**	0.50	0.70		55	50	45.5	40.5	36	31	27	22	17	12.5	8
PKSm 70	**PKS 70**	0.60	0.85		65	62	57	52	47	42	37	32	27	22	18
PKSm 80	**PKS 80**	0.75	1		70	66	61	56	51	46	41	36.5	31	27	22

Q = Flow rate **H** = Total manometric head **HS** = Suction height

Tolerance of characteristic curves in compliance with EN ISO 9906 App. A.

INSTALLATION EXAMPLE

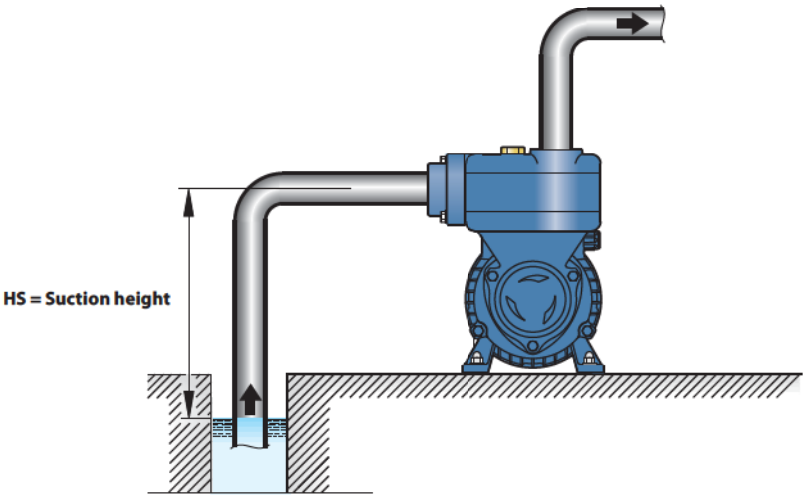

POS.	COMPONENT	CONSTRUCTION CHARACTERISTICS
1	**PUMP BODY**	Cast iron, complete with threaded ports in compliance with ISO 228/1 and the suction port with built-in flap-check valve
2	**MOTOR BRACKET**	Aluminium with brass insert (patented), reduces the risk of impeller seizure
3	**IMPELLER**	Brass, with peripheral radial vanes
4	**MOTOR SHAFT**	Stainless steel EN 10088-3 - 1.4104

5 MECHANICAL SEAL

Seal	*Shaft*	*Materials*		
Model	*Diameter*	*Stationary ring*	*Rotational ring*	*Elastomer*
AR-12	**Ø 12** mm	Ceramic	Graphite	NBR

6 BEARINGS

Pump	*Model*
PKS 60-65	**6201 ZZ / 6201 ZZ**
PKS 70-80	**6203 ZZ / 6203 ZZ**

7 CAPACITOR

Pump	*Capacitance*	
Single-phase	*(230 V or 240 V)*	*(110 V)*
PKSm 60	**10** µF 450 VL	**25** µF 250 VL
PKSm 60	**14** µF 450 VL	**30** µF 250 VL
PKSm 70	**16** µF 450 VL	**60** µF 250 VL
PKSm 80	**20** µF 450 VL	**60** µF 250 VL

8 ELECTRIC MOTOR

PKSm: single-phase 230 V - 50 Hz with thermal overload protector built-in to the winding.
PKS: three-phase 230/400 V - 50 Hz.

➠ **Pumps fitted with the three-phase motor option offer IE2 (IEC 60034-30) class high performance**

– Insulation: F class.
– Protection: IP 44.

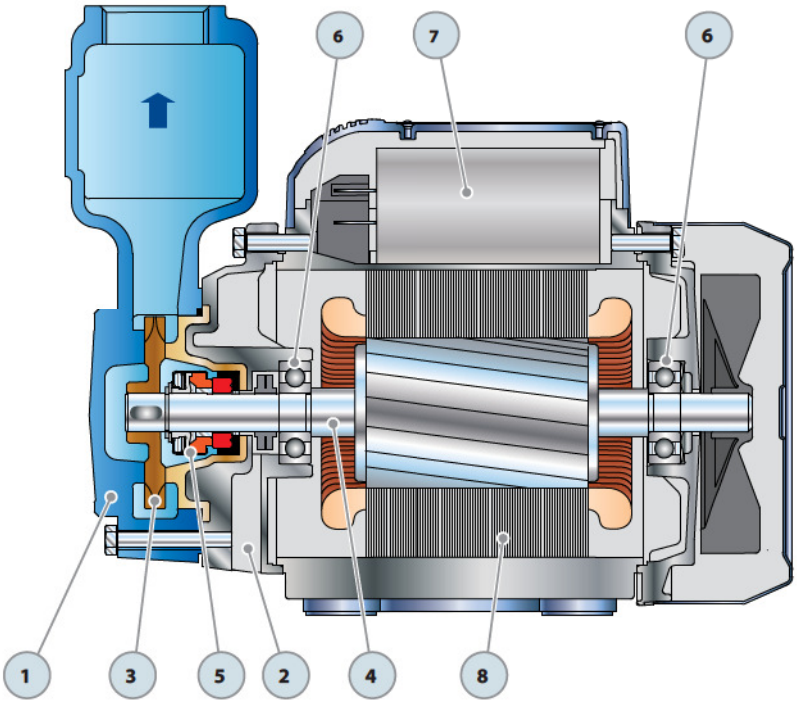

DIMENSIONS AND WEIGHT

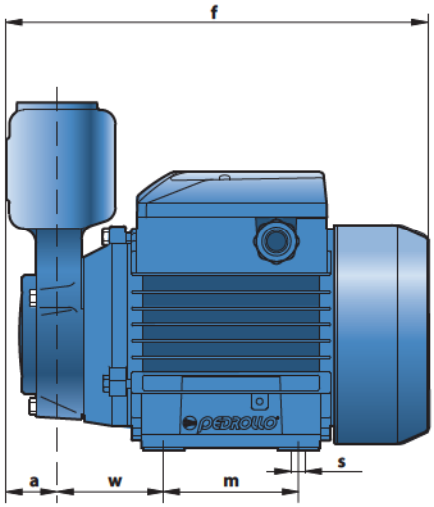

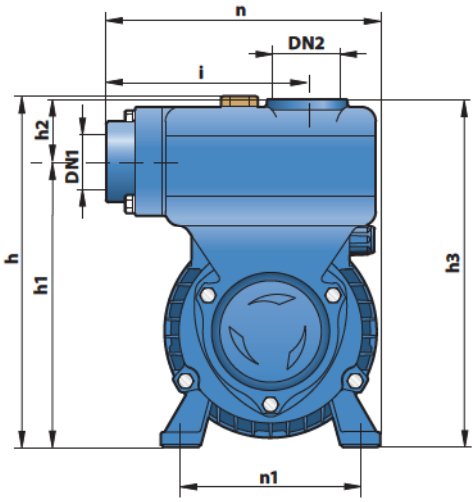

MODEL		PORTS		DIMENSIONS mm												kg	
Single-phase	Three-phase	DN1	DN2	a	f	h	h1	h2	h3	i	m	n	n1	w	s	1~	3~
PKSm 60	PKS 60	1"	1"	29	230	192	156	34	190	110	80	150	100	55	7	**6.0**	**6.0**
PKSm 65	PKS 65															**7.5**	**7.0**
PKSm 70	PKS 70				260	200	164		198		90	160	112	62		**10.6**	**9.7**
PKSm 80	PKS 80															**10.6**	**9.7**

ABSORPTION

MODEL	VOLTAGE (single-phase)		
Single-phase	230 V	240 V	110 V
PKSm 60	**2.5** A	**2.4** A	**5.5** A
PKSm 65	**3.7** A	**3.4** A	**7.4** A
PKSm 70	**5.2** A	**4.8** A	**10.8** A
PKSm 80	**5.2** A	**4.8** A	**10.8** A

MODEL	VOLTAGE (three-phase)			
Three-phase	230 V	400 V	240 V	415 V
PKS 60	**2.0** A	**1.15** A	**1.9** A	**1.1** A
PKS 65	**3.0** A	**1.7** A	**2.8** A	**1.6** A
PKS 70	**3.8** A	**2.2** A	**3.3** A	**1.9** A
PKS 80	**3.8** A	**2.2** A	**3.3** A	**1.9** A

PALLETIZATION

MODEL		GROUPAGE				CONTAINER			
		n°	H	kg		n°	H	kg	
Single-phase	Three-phase	pumps	(mm)	1~	3~	pumps	(mm)	1~	3~
PKSm 60	PKS 60	**189**	1570	1155	1155	**243**	1970	1480	1480
PKSm 65	PKS 65	**189**	1570	1440	1340	**243**	1970	1840	1720
PKSm 70	PKS 70	**105**	1300	1130	1040	**168**	1980	1800	1650
PKSm 80	PKS 80	**105**	1300	1130	1040	**168**	1980	1800	1650

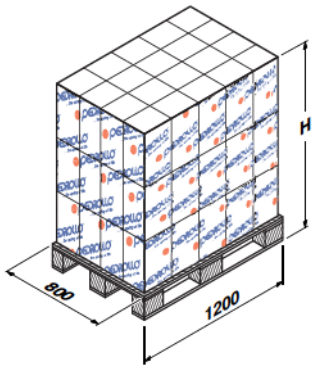

PQ

Pumps with peripheral impeller

PERFORMANCE RANGE

- Flow rate up to **90 l/min** (5.4 m^3/h)
- Head up to **100 m**

APPLICATION LIMITS

- Manometric suction lift up to **8 m**
- Liquid temperature between **-10 °C** and **+90 °C**
- Ambient temperature between **-10 °C** and **+40 °C**
- Max. working pressure:
  - **6 bar** for PQ 60-65
  - **10 bar** for PQ 70-80-81-90-100-200-300
- Continuous service **S1**

CONSTRUCTION AND SAFETY STANDARDS

EN 60034-1
IEC 60034-1
CEI 2-3

CERTIFICATIONS

АИЗО

УкрТЕСТ-003

INSTALLATION AND USE

Suitable for use with clean water that does not contain abrasive particles and liquids that are not chemically aggressive towards the materials from which the pump is made.
The hydraulic characteristics of these pumps, coupled with their compactness, makes them suitable for use in both domestic and industrial applications.
The pump should be installed in an enclosed environment, or at least sheltered from inclement weather.

PATENTS - TRADE MARKS - MODELS

- Motor bracket: patent n° IT1243605
- Registered Italian model n° 72753

OPTIONALS AVAILABLE ON REQUEST

- Special mechanical seal
- EN 10088-3 - 1.4401 (AISI 316) stainless steel motor shaft
- Other voltages or 60 Hz frequency
- IP55 class protection

GUARANTEE

2 years subject to terms and conditions

CHARACTERISTIC CURVES AND PERFORMANCE DATA

50 Hz n= 2900 1/min HS= 0 m

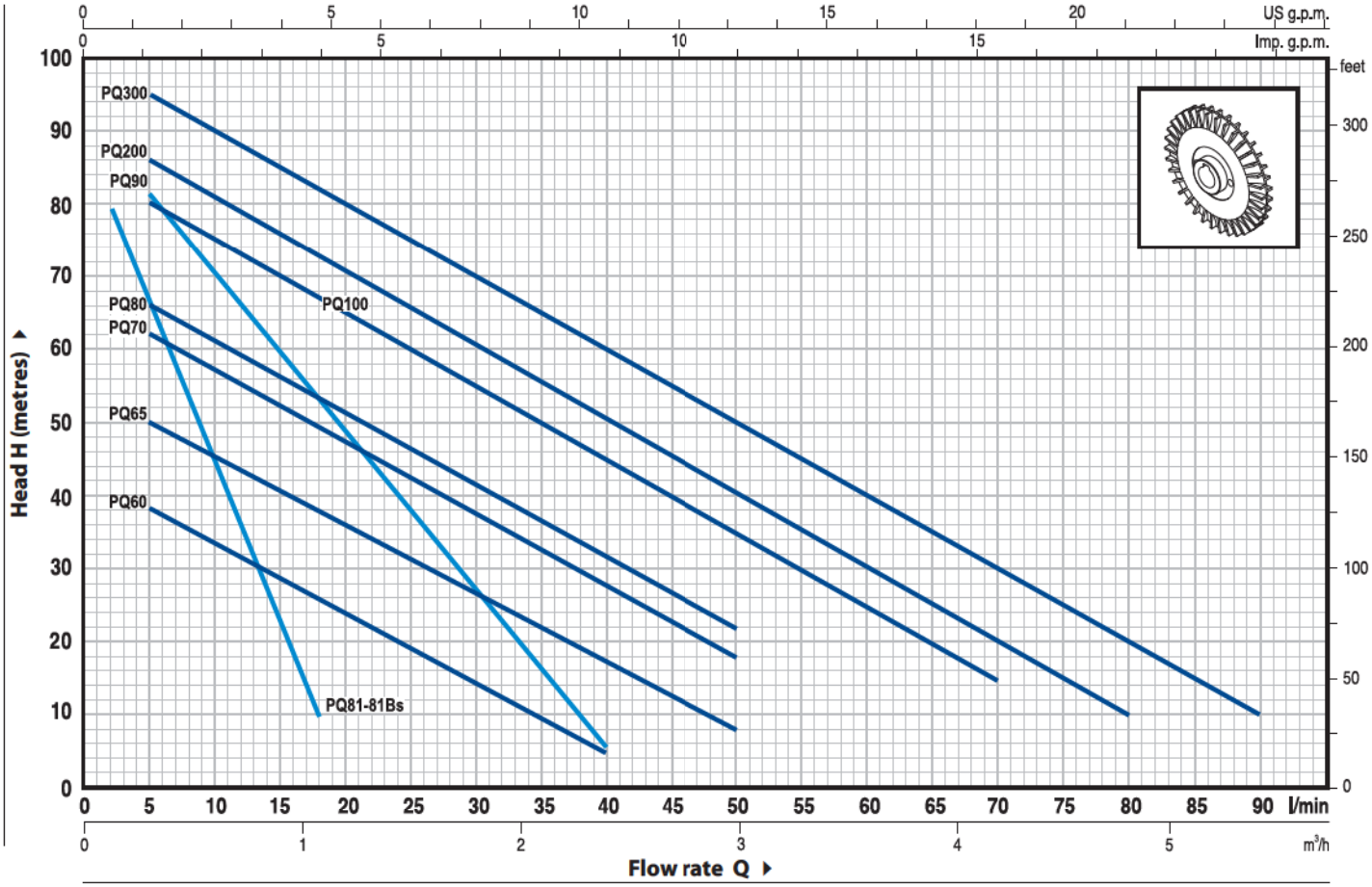

MODEL Single-phase	MODEL Three-phase	POWER kW	POWER HP	Q m³/h	0	0.3	0.6	0.9	1.2	1.5	1.8	2.1	2.4	3.0	3.6	4.2	4.8	5.4
				Q l/min	**0**	**5**	**10**	**15**	**20**	**25**	**30**	**35**	**40**	**50**	**60**	**70**	**80**	**90**
PQm 60	**PQ 60**	0.37	0.50	H metres	40	38	33.5	29	24	19.5	15	10	5					
PQm 65	**PQ 65**	0.50	0.70		55	50	45.5	40.5	36	31	27	22	17	8				
PQm 70	**PQ 70**	0.60	0.85		65	62	57	52	47	42	37	32	27	18				
PQm 80	**PQ 80**	0.75	1		70	66	61	56	51	46	41	36.5	31	22				
PQm 90	**PQ 90**	0.75	1		90	82	71	60	49	38	27	17	5					
PQm 100	**PQ 100**	1.1	1.5		85	80	75	70	65	60	55	50	45	35	25	15		
PQm 200	**PQ 200**	1.5	2		90	86	81	76	71	65.5	60	55	50	40	30	20	10	
–	**PQ 300**	2.2	3		100	95	90	85	80	75	70	65	60	50	40	30	20	10

MODEL Single-phase	MODEL Three-phase	POWER kW	POWER HP	Q m³/h	0	0.12	0.24	0.36	0.48	0.60	0.72	0.84	0.96	1.08
				Q l/min	**0**	**2**	**4**	**6**	**8**	**10**	**12**	**14**	**16**	**18**
PQm 81	**PQ 81**	0.50	0.70	H metres	90	80	71	63	54	45	37	28	19	10
PQm 81-Bs	**PQ 81-Bs**	0.50	0.70		90	80	71	63	54	45	37	28	19	10

➡ ***PQ 81 Bs= version with brass pump body***

Q = Flow rate **H** = Total manometric head **HS** = Suction height

Tolerance of characteristic curves in compliance with EN ISO 9906 App. A.

POS.	COMPONENT	CONSTRUCTION CHARACTERISTICS
1	PUMP BODY	Cast iron (brass for PQ 81-Bs), complete with threaded ports in compliance with ISO 228/1
2	MOTOR BRACKET	Aluminium with brass insert (patented), reduces the risk of impeller seizure
3	IMPELLER	Brass, with peripheral radial vanes
4	MOTOR SHAFT	Stainless steel EN 10088-3 - 1.4104

5 MECHANICAL SEAL

Pump	*Seal*	*Shaft*	*Materials*		
Model	*Model*	*Diameter*	*Stationary ring*	*Rotational ring*	*Elastomer*
PQ 60-65	**AR-12**	**Ø 12** mm	Ceramic	Graphite	NBR
PQ 70-80-81-81Bs-90	**FN-12**	**Ø 12** mm	Ceramic	Graphite	NBR
PQ 100-200-300	**FN-14**	**Ø 14** mm	Graphite	Ceramic	NBR

6 BEARINGS

Pump	*Model*
PQ 60-65-81-81Bs	**6201 ZZ / 6201 ZZ**
PQ 70-80-90	**6203 ZZ / 6203 ZZ**
PQ 100-200-300	**6204 ZZ / 6204 ZZ**

7 CAPACITOR

Pump	*Capacitance*	
Single-phase	*(230 V or 240 V)*	*(110 V)*
PQm 60	**10** µF 450 VL	**25** µF 250 VL
PQm 65	**14** µF 450 VL	**30** µF 250 VL
PQm 70	**16** µF 450 VL	**60** µF 300 VL
PQm 80	**20** µF 450 VL	**60** µF 300 VL
PQm 81 - 81Bs	**14** µF 450 VL	**30** µF 250 VL
PQm 90	**20** µF 450 VL	**60** µF 300 VL
PQm 100	**31.5** µF 450 VL	**60** µF 250 VL
PQm 200	**45** µF 450 VL	**80** µF 250 VL

8 ELECTRIC MOTOR

PQm: single-phase 230 V - 50 Hz with thermal overload protector built-in to the winding.
PQ: three-phase 230/400 V - 50 Hz.

➠ **Pumps fitted with the three-phase motor option offer IE2 (IEC 60034-30) class high performance**

– Insulation: F class.
– Protection: IP 44.

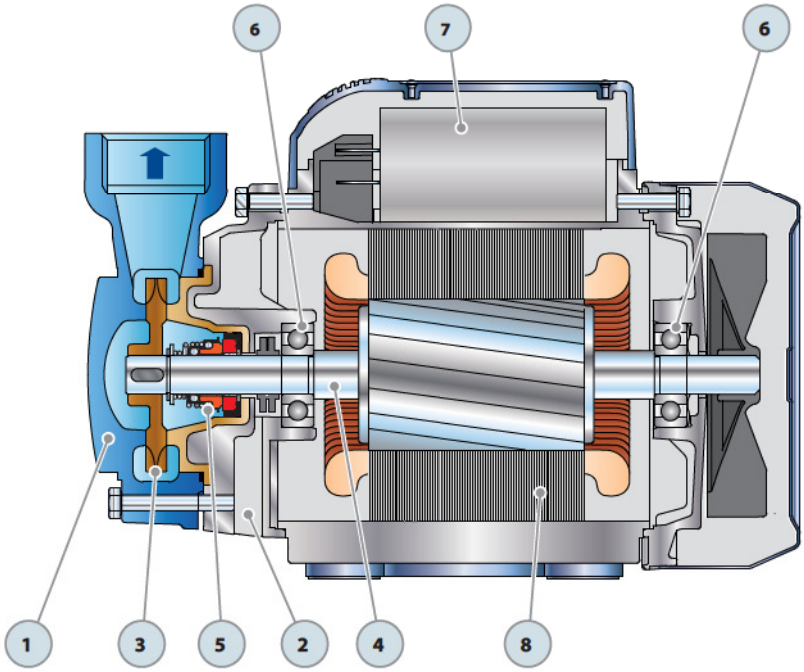

DIMENSIONS AND WEIGHT

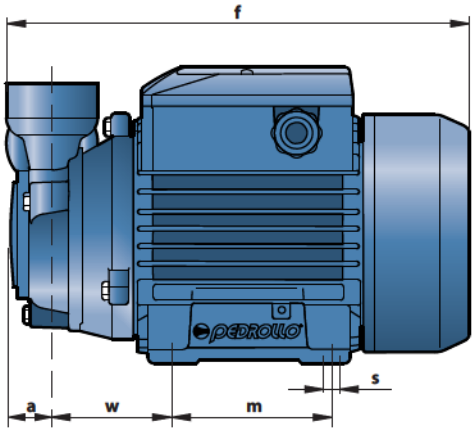

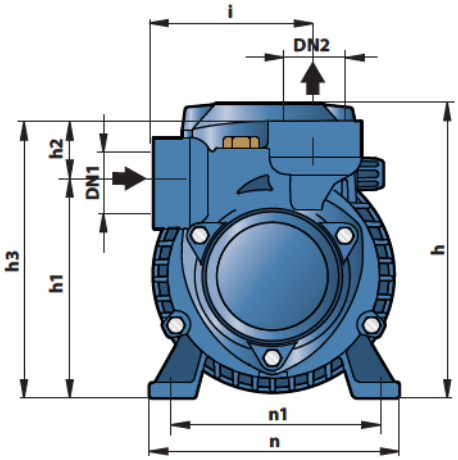

MODEL		PORTS		DIMENSIONS mm												kg	
Single-phase	Three-phase	DN1	DN2	a	f	h	h1	h2	h3	i	m	n	n1	w	s	1~	3~
PQm 60	PQ 60	1″	1″	22	225	152	108	30	138	78	80	120	100	55	7	**5.1**	**5.1**
PQm 65	PQ 65						113		143					57		**6.6**	**6.1**
PQm 70	PQ 70				255	180	121		151	83	90	138	112	62		**9.7**	**9.0**
PQm 80	PQ 80															**9.7**	**9.0**
PQm 81	PQ 81	½″	½″	18	220	152	119	23	141	71	80	120	100	58		**6.6**	**6.2**
PQm 81-Bs	PQ 81-Bs															**6.5**	**6.1**
PQm 90	PQ 90	¾″	¾″	22	255	180	126	27	153	84	90	138	112	62		**9.9**	**8.8**
PQm 100	PQ 100	1″	1″	25	318	212	140	30	170	89	100	164	125	85	9	**14.1**	**12.2**
PQm 200	PQ 200															**15.2**	**14.1**
–	PQ 300															**–**	**15.2**

ABSORPTION

MODEL	VOLTAGE (single-phase)		
Single-phase	230 V	240 V	110 V
PQm 60	**2.6** A	**2.4** A	**5.2** A
PQm 65	**3.7** A	**3.4** A	**7.4** A
PQm 70	**5.2** A	**4.8** A	**10.8** A
PQm 80	**5.2** A	**4.8** A	**10.8** A
PQm 81	**3.4** A	**2.7** A	**5.8** A
PQm 81-Bs	**3.4** A	**2.7** A	**5.8** A
PQm 90	**5.6** A	**5.1** A	**11.5** A
PQm 100	**9.0** A	**8.2** A	**18.0** A
PQm 200	**12.0** A	**11.0** A	**24.0** A

MODEL	VOLTAGE (three-phase)				
Three-phase	230 V	400 V	690 V	240 V	415 V
PQ 60	**2.0** A	**1.15** A	**–**	**1.9** A	**1.1** A
PQ 65	**3.0** A	**1.7** A	**–**	**2.8** A	**1.6** A
PQ 70	**3.8** A	**2.2** A	**–**	**3.3** A	**1.9** A
PQ 80	**3.8** A	**2.2** A	**–**	**3.3** A	**1.9** A
PQm 81	**2.2** A	**1.3** A	**–**	**2.0** A	**1.15** A
PQm 81-Bs	**2.2** A	**1.3** A	**–**	**2.0** A	**1.15** A
PQ 90	**4.2** A	**2.4** A	**–**	**3.8** A	**2.2** A
PQ 100	**6.3** A	**3.6** A	**2.05** A	**5.7** A	**3.3** A
PQ 200	**7.6** A	**4.4** A	**2.5** A	**7.0** A	**4.0** A
PQ 300	**9.3** A	**5.4** A	**3.15** A	**8.7** A	**5.0** A

PALLETIZATION

MODEL		GROUPAGE				CONTAINER			
		n°	H	kg		n°	H	kg	
Single-phase	Three-phase	pumps	(mm)	1~	3~	pumps	(mm)	1~	3~
PQm 60	PQ 60	**240**	1440	1250	1250	**270**	1600	1400	1400
PQm 65	PQ 65	**240**	1440	1600	1490	**270**	1600	1800	1670
PQm 70	PQ 70	**120**	1270	1190	1100	**180**	1850	1770	1640
PQm 80	PQ 80	**120**	1280	1190	1100	**180**	1850	1770	1640
PQm 81	PQ 81	**192**	1460	1290	1210	**264**	1960	1760	1660
PQm 81-Bs	PQ 81-Bs	**192**	1460	1270	1190	**264**	1960	1740	1630
PQm 90	PQ 90	**120**	1280	1210	1080	**180**	1850	1800	1610
PQm 100	PQ 100	**72**	1510	1040	900	**96**	1970	1380	1190
PQm 200	PQ 200	**72**	1510	1120	1040	**96**	1970	1480	1380
–	PQ 300	**72**	1510	–	1120	**96**	1970	–	1480

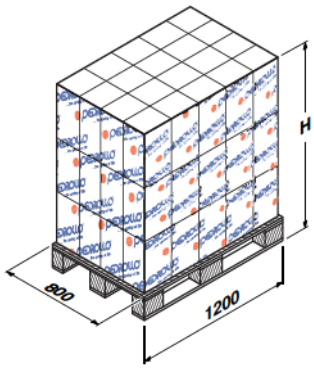

PQ 3000

Pump with peripheral impeller

PERFORMANCE RANGE

- Flow rate up to **50 l/min** (3 m^3/h)
- Head up to **180 m**

APPLICATION LIMITS

- Manometric suction lift up to **8 m**
- Liquid temperature between **-10 °C** and **+90 °C**
- Ambient temperature between **-10 °C** and **+40 °C**
- Max. working pressure **18 bar**
- Continuous service **S1**

CONSTRUCTION AND SAFETY STANDARDS

EN 60034-1
IEC 60034-1
CEI 2-3

CERTIFICATIONS

АИЗО

УкрТЕСТ-003

INSTALLATION AND USE

Suitable for use with clean water and liquids that are not chemically aggressive towards the materials from which the pump is made. The hydraulic characteristics of this pump, coupled with its compactness, make it suitable for use in the industrial applications. The pump should be installed in an enclosed environment, or at least sheltered from inclement weather.

PATENTS - TRADE MARKS - MODELS

- Motor bracket: patent n° IT1243605

OPTIONALS AVAILABLE ON REQUEST

- Special mechanical seal
- EN 10088-3 - 1.4401 (AISI 316) stainless steel motor shaft
- Other voltages or 60 Hz frequency

GUARANTEE

2 years subject to terms and conditions

CHARACTERISTIC CURVES AND PERFORMANCE DATA

50 Hz n= 2900 1/min HS= 0 m

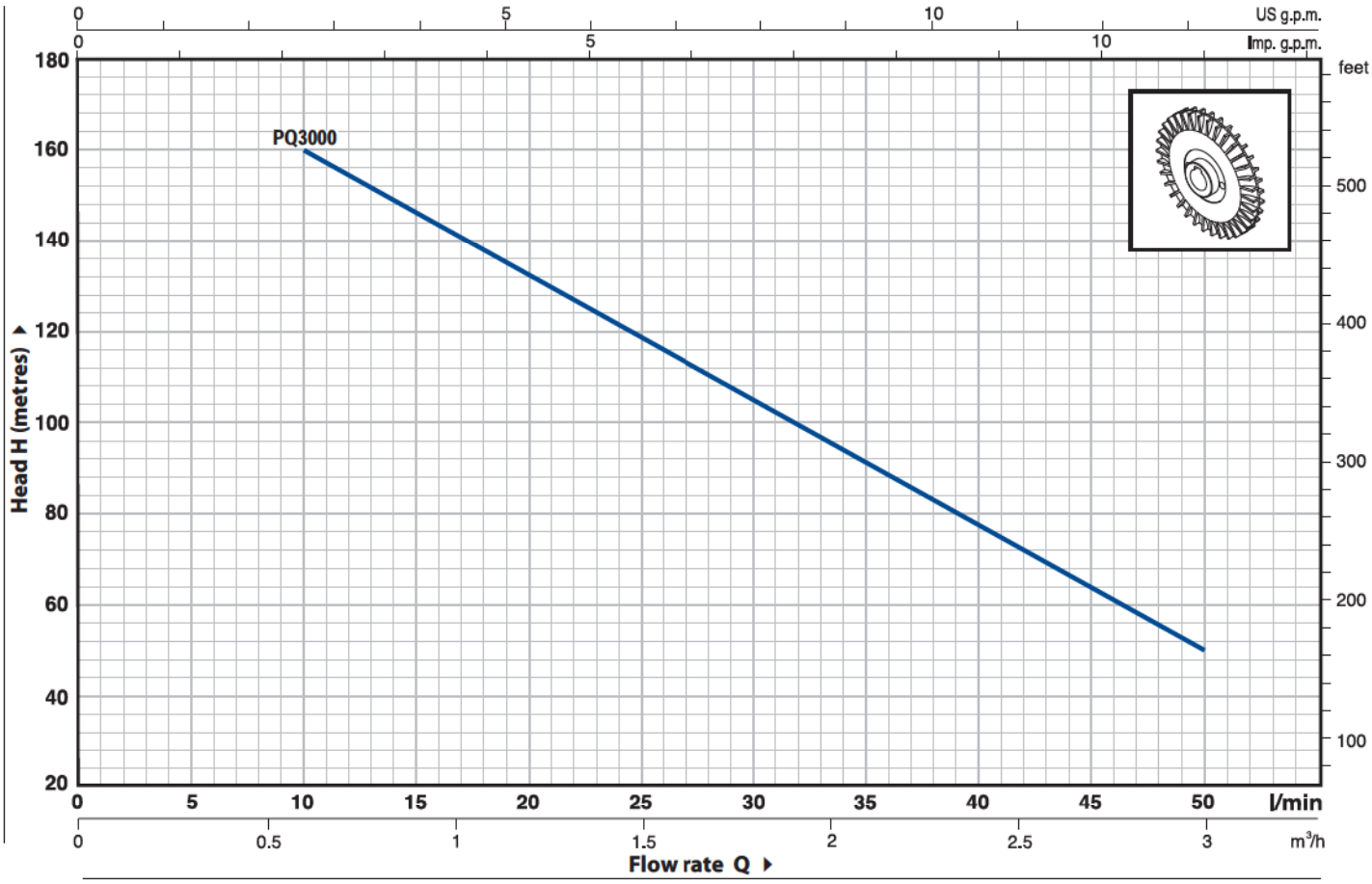

MODEL	POWER		Q	m³/h	0	0.6	0.9	1.2	1.5	1.8	2.1	2.4	2.7	3.0
Three-phase	kW	HP		l/min	**0**	**10**	**15**	**20**	**25**	**30**	**35**	**40**	**45**	**50**
PQ 3000	2.2	3	**H**	metres	180	160	145	132	118	105	92	78	63.5	50

Q = Flow rate **H** = Total manometric head **HS** = Suction height

Tolerance of characteristic curves in compliance with EN ISO 9906 App. A.

PQ 3000

POS.	COMPONENT	CONSTRUCTION CHARACTERISTICS
1	**PUMP BODY**	Cast iron, complete with threaded ports in compliance with ISO 228/1
2	**BODY PLATE**	Brass, with stainless steel shim disc
3	**MOTOR BRACKET**	Aluminium, with brass insert and stainless steel shim disc that reduces the risk of impeller seizure
4	**IMPELLER**	Bronze, with peripheral radial vanes
5	**MOTOR SHAFT**	Stainless steel EN 10088-3 - 1.4104
6	**MECHANICAL SEAL**	***Seal*** / ***Shaft*** / *Materials*

Model	***Diameter***	*Stationary ring*	*Rotational ring*	*Elastomer*
FN-18 NU	**Ø 18** mm	Graphite	Ceramic	NBR

7	**BEARINGS**	**6204 ZZ - C3 / 6204 ZZ - C3**
8	**ELECTRIC MOTOR**	**PQ 3000**: three-phase 230/400 V - 50 Hz. ➠ **Pump fitted with the three-phase motor option offers IE2 (IEC 60034-30) class high performance** – Insulation: H class. – Protection: IP 55.

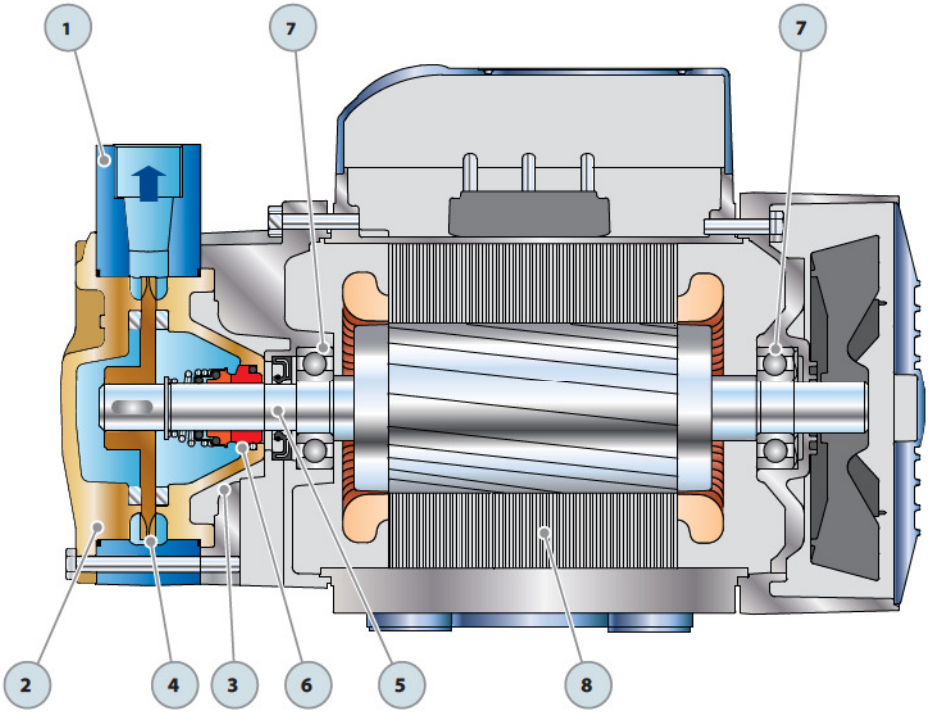

DIMENSIONS AND WEIGHT

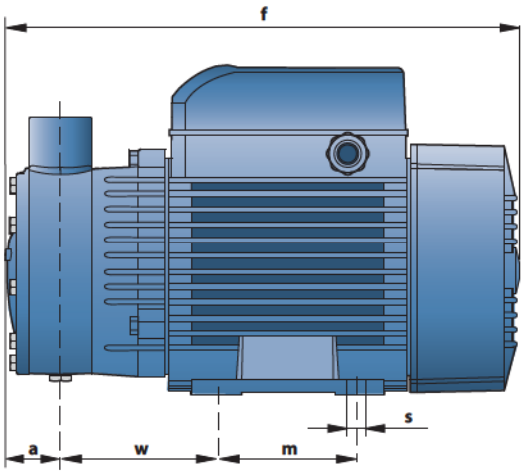

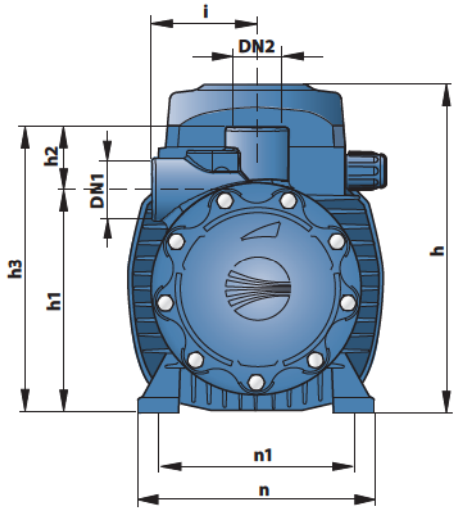

MODEL	PORTS		DIMENSIONS mm												kg
Three-phase	DN1	DN2	a	f	h	h1	h2	h3	i	m	n	n1	w	s	3~
PQ 3000	¾"	¾"	34	329	212	142	38	180	65	100	164	125	97	9	**18.8**

ABSORPTION

MODEL	VOLTAGE (three-phase)			
Three-phase	230 V	400 V	240 V	415 V
PQ 3000	**11.5** A	**6.6** A	**10.8** A	**6.2** A

PALLETIZATION

MODEL	GROUPAGE			CONTAINER		
	n° pumps	H (mm)	kg	n° pumps	H (mm)	kg
PQ 3000	**72**	1840	1380	**84**	2114	1600

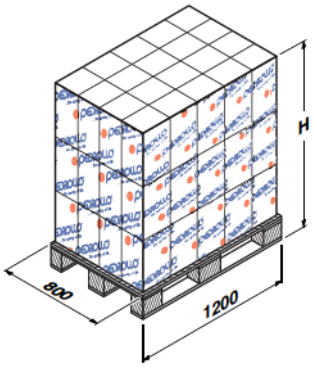

PV

Pump with peripheral impeller

PERFORMANCE RANGE

- Flow rate up to **10 l/min** (0.6 m^3/h)
- **50 Hz**: head up to **42 m**
- **60 Hz**: head up to **55 m**

APPLICATION LIMITS

- Manometric suction lift up to **8 m**
- Liquid temperature between **-10 °C** and **+90 °C**
- Ambient temperature between **-10 °C** and **+40 °C**
- Max. working pressure **10 bar**
- Continuous service **S1**

CONSTRUCTION AND SAFETY STANDARDS

EN 60034-1
IEC 60034-1
CEI 2-3

CERTIFICATIONS

АИ30

УкрТЕСТ-003

INSTALLATION AND USE

Suitable for use with clean water and liquids that are not chemically aggressive towards the materials from which the pump is made. The design of this particularly compact brass pump offers an effective guarantee against the formation of rust and oxidation; as a result they are recommended for use in industrial applications such as cooling and conditioning.
The pump should be installed in an enclosed environment, or at least sheltered from inclement weather.

PATENTS - TRADE MARKS - MODELS

- Motor bracket: patented n° IT1243605
- Registered Community Design n° 342159-0002

OPTIONALS AVAILABLE ON REQUEST

- Special mechanical seal
- EN 10088-3 - 1.4401 (AISI 316) stainless steel motor shaft
- Other voltages
- IP55 class protection

GUARANTEE

2 years subject to terms and conditions

CHARACTERISTIC CURVES AND PERFORMANCE DATA

50/60 Hz n= 2900/3450 1/min HS= 0 m

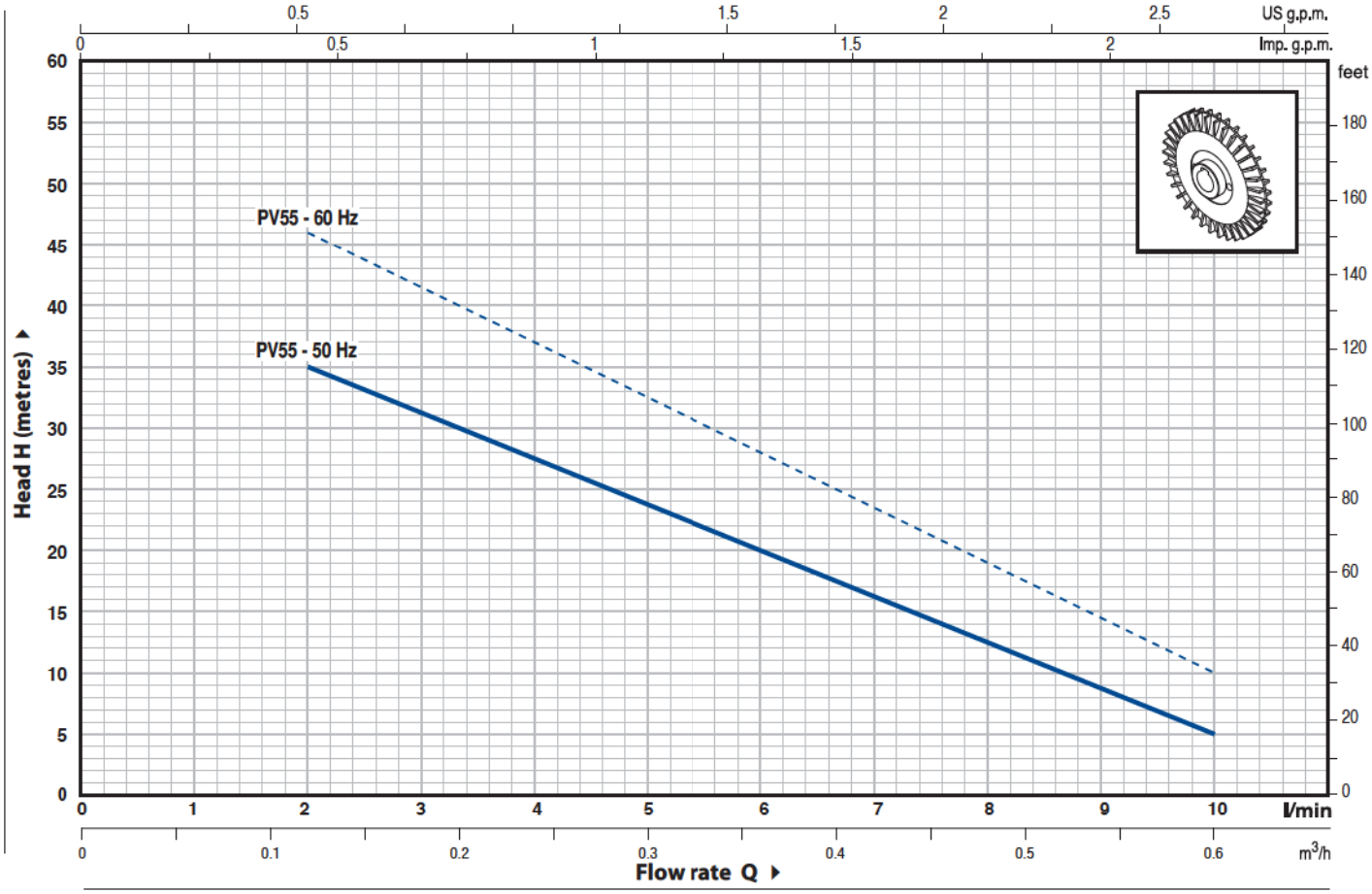

MODEL		POWER		Q	m³/h	0	0.12	0.18	0.24	0.30	0.36	0.42	0.48	0.54	0.60
Single-phase	Three-phase	kW	HP		l/min	**0**	**2**	**3**	**4**	**5**	**6**	**7**	**8**	**9**	**10**
PVm 55	**PV 55**	**0.18**	**0.25**	H metres	**50 Hz**	42	35	31	27.5	24	20.5	16	12.5	9	5
					60 Hz	55	46	41.5	37	32.5	28	23.5	19	14.5	10

Q = Flow rate **H** = Total manometric head **HS** = Suction height

Tolerance of characteristic curves in compliance with EN ISO 9906 App. A.

➠ The **PV 55** pump is designed to work at **50 Hz** and **60 Hz** (see the characteristic curves)

POS.	COMPONENT	CONSTRUCTION CHARACTERISTICS
1	**PUMP BODY**	Brass, with threaded ports in compliance with ISO 228/1
2	**PUMP BODY BACK-PLATE**	Brass
3	**MOTOR BRACKET**	Aluminium
4	**IMPELLER**	Brass, with peripheral radial vanes
5	**MOTOR SHAFT**	Stainless steel EN 10088-3 - 1.4104
6	**MECHANICAL SEAL**	***Seal*** / ***Shaft*** / *Materials*

Model	***Diameter***	*Stationary ring*	*Rotational ring*	*Elastomer*
PNL-12E	**Ø 12** mm	Ceramic	Graphite	EPDM

7	**BEARINGS**	**6201 ZZ / 6201 ZZ**
8	**CAPACITOR**	***Capacitance***

230÷240 V (50÷60 Hz)	***110 V (50÷60 Hz)***
10 µF 450 VL	**25** µF 250 VL

9	**ELECTRIC MOTOR**	**PVm**: single-phase 230 V - 50÷60 Hz with thermal overload protector built-in to the winding. **PV**: three-phase 230/400 V - 50÷60 Hz. ➠ **Pump fitted with the three-phase motor option offers IE2 (IEC 60034-30) class high performance** – Insulation: F class. – Protection: IP 44.

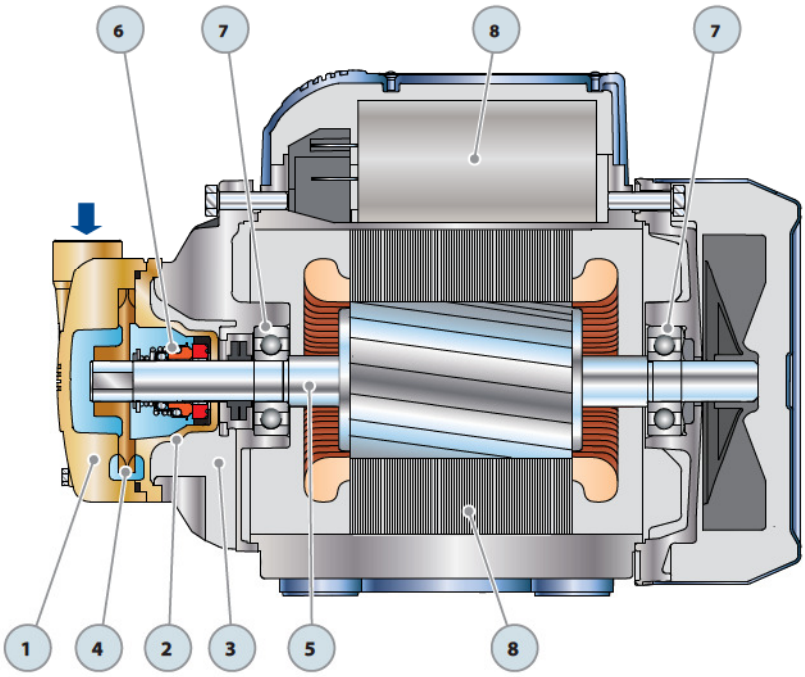

DIMENSIONS AND WEIGHT

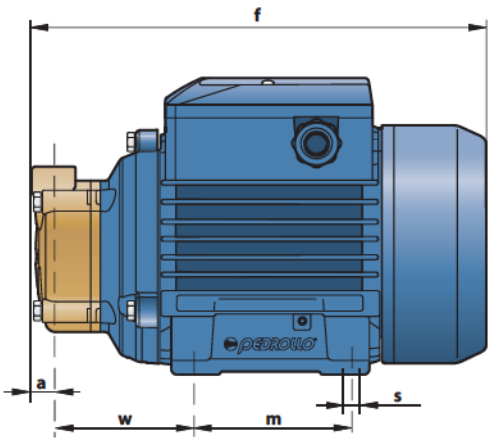

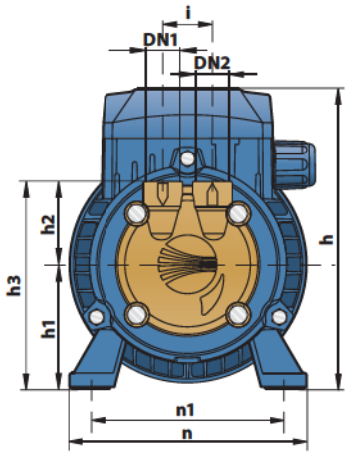

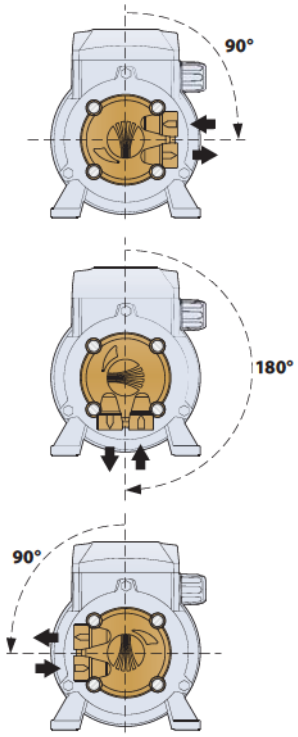

When rotating the pump body it is also necessary to rotate the pump body back-plate

MODEL		PORTS		DIMENSIONS mm												kg	
Single-phase	Three-phase	DN1	DN2	a	f	h	h1	h2	h3	i	m	n	n1	w	s	1~	3~
PVm 55	PV 55	¼"	¼"	11	223	152	63	42	105	25	80	120	100	65	7	**4.6**	**4.6**

ABSORPTION

MODEL	VOLTAGE (single-phase)		
Single-phase	230 V	240 V	110 V
PVm 55 (**50Hz**)	**1.6** A	**1.5** A	**3.2** A
PVm 55 (**60Hz**)	**2.0** A	**1.9** A	**4.0** A

MODEL	VOLTAGE (three-phase)	
Three-phase	230 V	400 V
PV 55 (**50Hz**)	**1.7** A	**1.0** A
PV 55 (**60Hz**)	**1.7** A	**1.0** A

PALLETIZATION

MODEL		GROUPAGE				CONTAINER			
		n°	H	kg		n°	H	kg	
Single-phase	Three-phase	pumps	(mm)	1~	3~	pumps	(mm)	1~	3~
PVm 55	PV 55	**192**	1460	910	910	**264**	1960	1240	1240

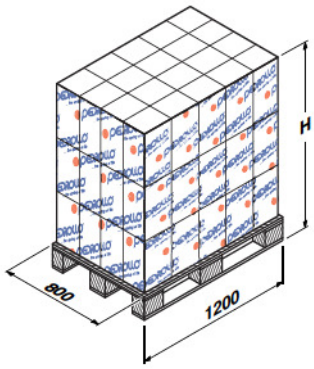

PQA

Pumps with peripheral impeller

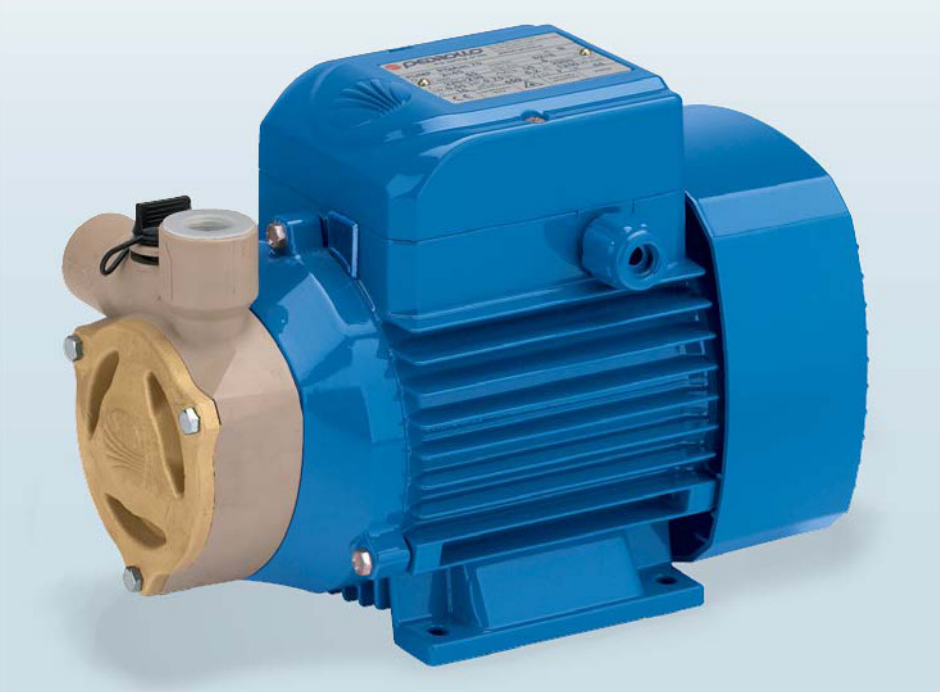

PERFORMANCE RANGE

- Flow rate up to **50 l/min** (3 m^3/h)
- Head up to **90 m**

APPLICATION LIMITS

- Manometric suction lift up to **8 m**
- Liquid temperature between **-10 °C** and **+90 °C**
- Ambient temperature between **-10 °C** and **+40 °C**
- Max. working pressure **10 bar**
- Continuous service **S1**

CONSTRUCTION AND SAFETY STANDARDS

EN 60034-1
IEC 60034-1
CEI 2-3

CERTIFICATIONS

АИЗО

УкрТЕСТ-003

INSTALLATION AND USE

Suitable for use with clean water that does not contain abrasive particles and liquids that are not chemically aggressive towards the materials from which the pump is made.
The RYTON and brass pump body construction guarantees against the formation of rust and oxidation. As a result of these characteristics these pumps are suitable for use in industrial applications such as cooling, conditioning and boiler feed.
The pump should be installed in an enclosed environment, or at least sheltered from inclement weather.

PATENTS - TRADE MARKS - MODELS

- Motor bracket: patented n° IT1243605
- Registered Community Design n° 342159-001

OPTIONALS AVAILABLE ON REQUEST

- Special mechanical seal
- EN 10088-3 - 1.4401 (AISI 316) stainless steel motor shaft
- Other voltages or 60 Hz frequency
- IP55 class protection

GUARANTEE

2 years subject to terms and conditions

CHARACTERISTIC CURVES AND PERFORMANCE DATA

50 Hz n= 2900 1/min HS= 0 m

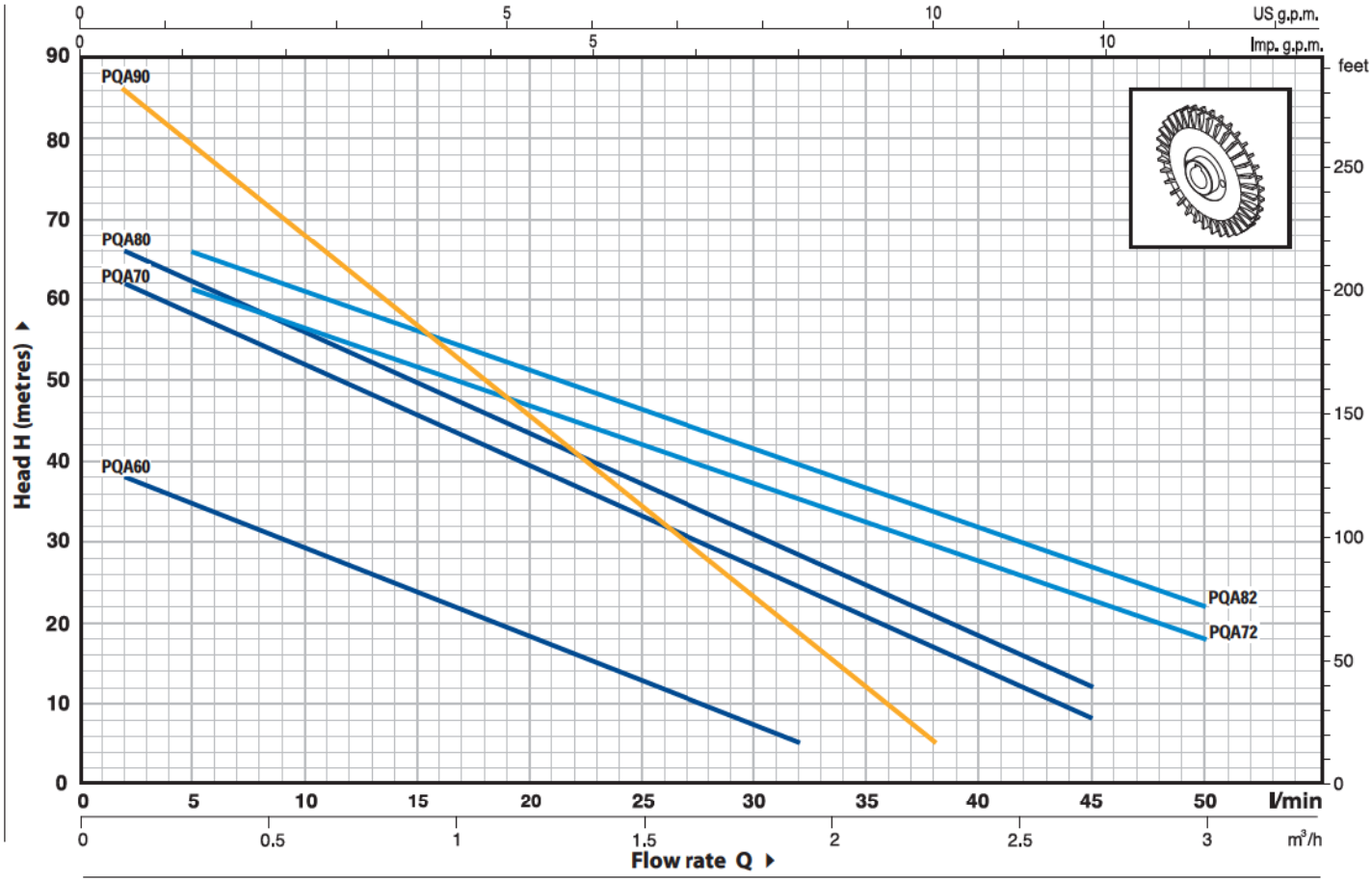

MODEL		POWER		Q m³/h	0	0.1	0.3	0.6	0.9	1.2	1.5	1.8	1.9	2.3	2.7	3.0
Single-phase	Three-phase	kW	HP	l/min	**0**	**2**	**5**	**10**	**15**	**20**	**25**	**30**	**32**	**38**	**45**	**50**
PQAm 60	**PQA 60**	0.37	0.50	H metres	40	38	35	29	23.5	18	12.5	7	5			
PQAm 70	**PQA 70**	0.55	0.75		65	62	58	52	45.5	39.5	33	27	24	16.5	8	
PQAm 72	**PQA 72**	0.55	0.75		65	-	62	57	52	47	42	37.5	35.5	29.5	22.5	18
PQAm 80	**PQA 80**	0.75	1		70	66	62	56	49.5	43	37	31	28	20.5	12	
PQAm 82	**PQA 82**	0.75	1		70	-	66	61	56	51	46	41.5	39.5	37.5	26.5	22
PQAm 90	**PQA 90**	0.75	1		90	86	79	68	56.5	45.5	34	23	18.5	5		

Q = Flow rate **H** = Total manometric head **HS** = Suction height

Tolerance of characteristic curves in compliance with EN ISO 9906 App. A.

POS.	COMPONENT	CONSTRUCTION CHARACTERISTICS
1	**PUMP BODY**	RYTON, complete with threaded metallic port inserts in compliance with ISO 228/1
2	**BODY PLATE**	Brass
3	**MOTOR BRACKET**	Aluminium with brass insert (patented), reduces the risk of impeller seizure
4	**IMPELLER**	Brass, with peripheral radial vanes
5	**MOTOR SHAFT**	Stainless steel EN 10088-3 - 1.4104

6 MECHANICAL SEAL

Seal	*Shaft*	*Materials*		
Model	*Diameter*	*Stationary ring*	*Rotational ring*	*Elastomer*
FN-12	**Ø 12** mm	Ceramic	Graphite	NBR

7 BEARINGS

Pump	*Model*
PQA 60	**6201 ZZ / 6201 ZZ**
PQA 70-72-80-82-90	**6203 ZZ / 6203 ZZ**

8 CAPACITOR

Pump	*Capacitance*	
Single-phase	*(230 V or 240 V)*	*(110 V)*
PQAm 60	**10** µF 450 VL	**25** µF 250 VL
PQAm 70-72	**16** µF 450 VL	**60** µF 250 VL
PQAm 80-82	**20** µF 450 VL	**60** µF 250 VL
PQAm 90	**20** µF 450 VL	**60** µF 250 VL

9 ELECTRIC MOTOR

PQAm: single-phase 230 V - 50 Hz with thermal overload protector built-in to the winding.
PQA: three-phase 230/400 V - 50 Hz.

➠ **Pumps fitted with the three-phase motor option offer IE2 (IEC 60034-30) class high performance**

– Insulation: F class.
– Protection: IP 44.

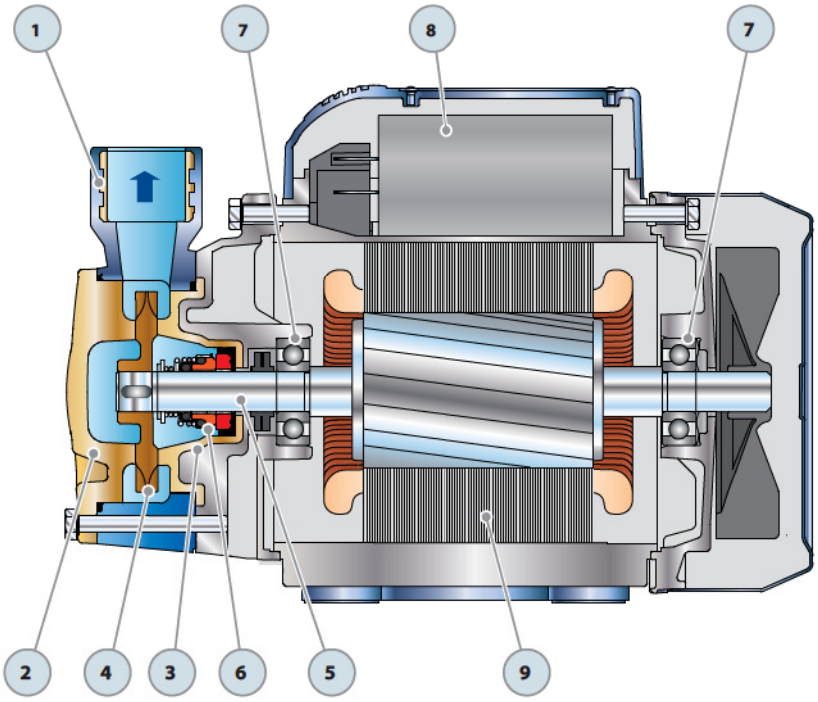

DIMENSIONS AND WEIGHT

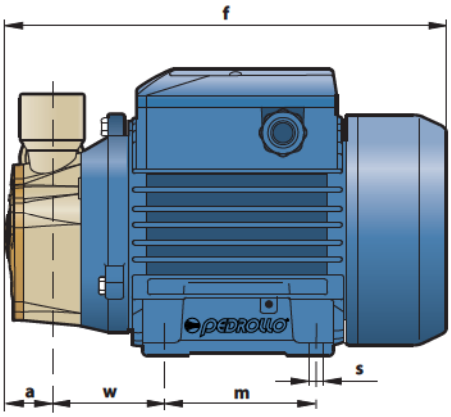

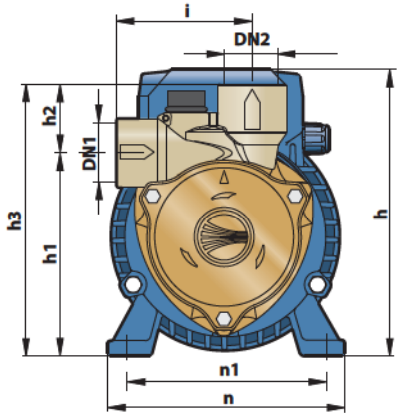

MODEL		PORTS		DIMENSIONS mm												kg	
Single-phase	Three-phase	DN1	DN2	a	f	h	h1	h2	h3	i	m	n	n1	w	s	1~	3~
PQAm 60	PQA 60	½"	½"	25	226	152	103	33	136	72.5	80	120	100	55	7	**4.8**	**4.8**
PQAm 70	PQA 70			28	258	179	116.5	32.5	149		90	138	112	62		**9.4**	**8.4**
PQAm 72	PQA 72	1"	1"				121	30	151	83						**9.5**	**8.5**
PQAm 80	PQA 80	½"	½"				116.5	32.5	149	72.5						**9.4**	**8.4**
PQAm 82	PQA 82	1"	1"				121	30	151	83						**9.5**	**8.5**
PQAm 90	PQA 90	½"	½"					35	156	76						**9.5**	**8.5**

ABSORPTION

MODEL	VOLTAGE (single-phase)		
Single-phase	230 V	240 V	110 V
PQAm 60	**2.5** A	**2.4** A	**5.2** A
PQAm 70	**6.2** A	**5.5** A	**10.8** A
PQAm 72	**6.2** A	**5.5** A	**10.8** A
PQAm 80	**6.3** A	**5.5** A	**10.8** A
PQAm 82	**6.3** A	**5.5** A	**10.8** A
PQAm 90	**5.6** A	**5.1** A	**11.5** A

MODEL	VOLTAGE (three-phase)			
Three-phase	230 V	400 V	240 V	415 V
PQA 60	**2.0** A	**1.15** A	**1.9** A	**1.1** A
PQA 70	**4.2** A	**2.4** A	**3.7** A	**2.2** A
PQA 72	**4.2** A	**2.4** A	**3.7** A	**2.2** A
PQA 80	**4.2** A	**2.4** A	**3.7** A	**2.2** A
PQA 82	**4.2** A	**2.4** A	**3.7** A	**2.2** A
PQA 90	**4.2** A	**2.4** A	**3.8** A	**2.2** A

PALLETIZATION

MODEL		GROUPAGE				CONTAINER			
		n°	H	kg		n°	H	kg	
Single-phase	Three-phase	pumps	(mm)	1~	3~	pumps	(mm)	1~	3~
PQAm 60	PQA 60	**192**	1490	940	940	**264**	1990	1290	1290
PQAm 70	PQA 70	**120**	1310	1150	1030	**180**	1900	1710	1530
PQAm 72	PQA 72	**120**	1310	1160	1040	**180**	1900	1730	1550
PQAm 80	PQA 80	**120**	1310	1150	1030	**180**	1900	1710	1530
PQAm 82	PQA 82	**120**	1310	1160	1040	**180**	1900	1730	1550
PQAm 90	PQA 90	**120**	1310	1160	1040	**180**	1900	1730	1550

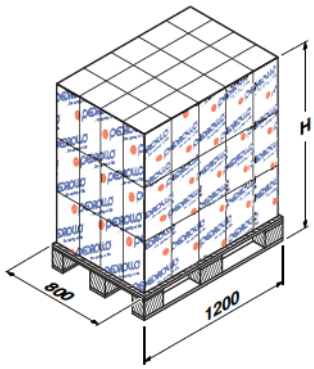

CP

Centrifugal pumps

PERFORMANCE RANGE

- Flow rate up to **160 l/min** (9.6 m^3/h)
- Head up to **58 m**

APPLICATION LIMITS

- Manometric suction lift up to **7 m**
- Liquid temperature between **-10 °C** and **+90 °C**
  (up to +40 for the version with the technopolymer impeller)
- Ambient temperature up to **+40 °C**
- Max. working pressure:
  – **6 bar** for CP 100-130-132-150-158
  – **10 bar** for CP 170-190-200
- Continuous service **S1**

CONSTRUCTION AND SAFETY STANDARDS

EN 60034-1
IEC 60034-1
CEI 2-3

CERTIFICATIONS

АИЗО

УкрТЕСТ-003

INSTALLATION AND USE

Suitable for use with clean water and liquids that are not chemically aggressive towards the materials from which the pump is made. As a result of their reliability and the fact that they are easy to use, these pumps are widely used in domestic and civil applications such as the distribution of water in combination with small and medium sized pressure sets, for transferring liquids and for the irrigation of gardens and allotments.
The pump should be installed in an enclosed environment, or at least sheltered from inclement weather.

PATENTS - TRADE MARKS - MODELS

- Registered Community Design n° 406160-0001

OPTIONALS AVAILABLE ON REQUEST

- Pump with technopolymer impeller
- Special mechanical seal
- Other voltages or 60 Hz frequency
- IP55 class protection for CP 170, CP 170M

GUARANTEE

2 years subject to terms and conditions

CHARACTERISTIC CURVES AND PERFORMANCE DATA

50 Hz n= 2900 1/min HS= 0 m

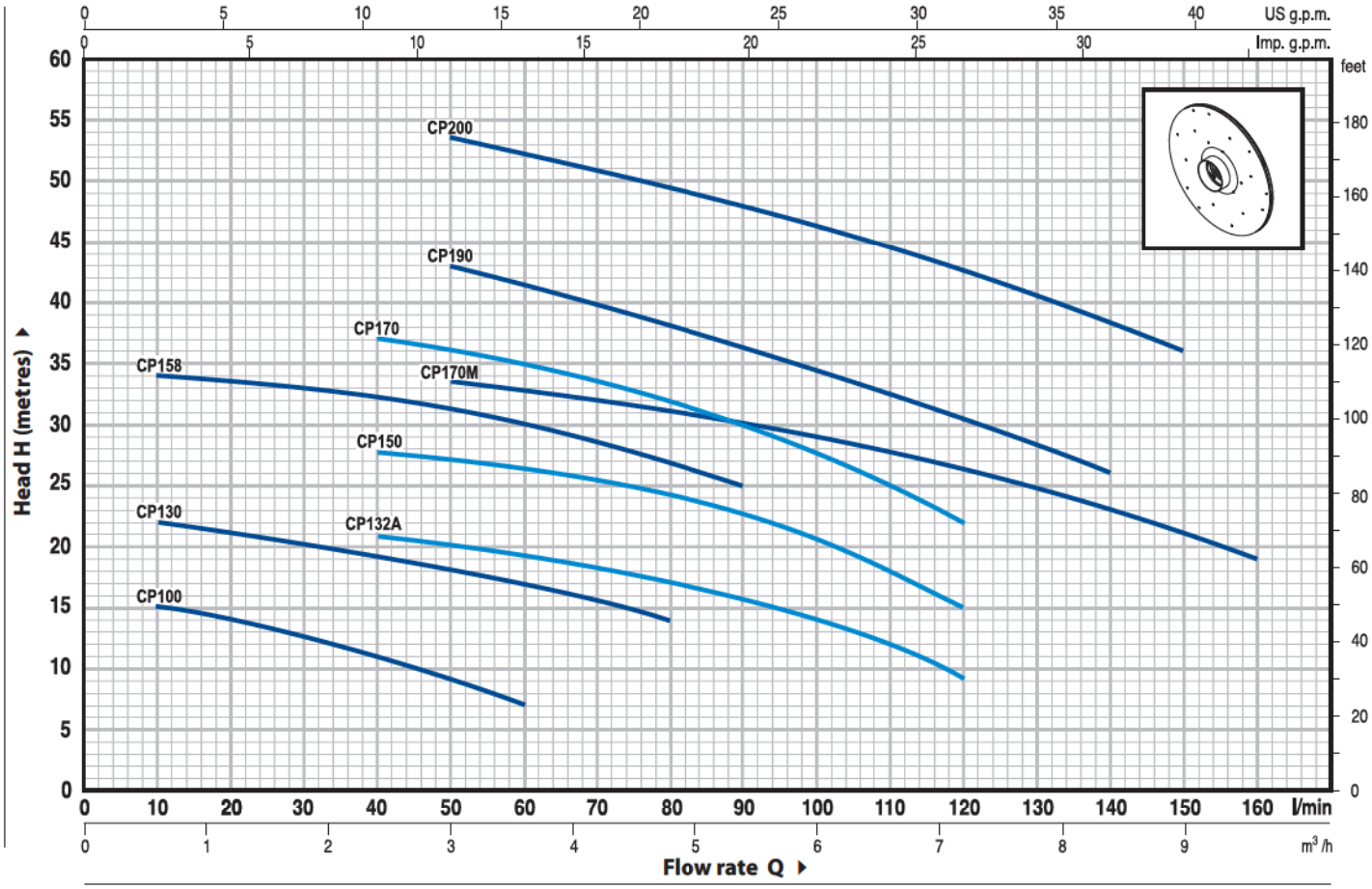

MODEL Single-phase	MODEL Three-phase	POWER kW	POWER HP	Q m³/h	0	0.6	1.2	1.8	2.4	3.0	3.6	4.2	4.8	5.4	6.0	6.6	7.2	7.8	8.4	9.0	9.6
				Q l/min	**0**	**10**	**20**	**30**	**40**	**50**	**60**	**70**	**80**	**90**	**100**	**110**	**120**	**130**	**140**	**150**	**160**
CPm 100	–	0.25	0.33		16	15	14	12.5	11	9	7										
CPm 130	**CP 130**	0.37	0.50		23	22	21	20	19	18	17	15.5	14								
CPm 132A	**CP 132A**	0.60	0.85		23	–	22	21.5	21	20	19	18	17	16	14	12	9				
CPm 150	**CP 150**	0.75	1		29.5	–	29	28.5	28	27.5	26.5	26	24.5	23	21	18	15				
CPm 158	**CP 158**	0.75	1	**H** metres	36	34	33.5	33	32.5	31.5	30	28.5	27	25							
CPm 170	**CP 170**	1.1	1.5		41	–	–	38	37	36	35	33.5	32	30	27.5	25	22				
CPm 170M	**CP 170M**	1.1	1.5		36	–	–	35	34.5	33.5	33	32	31	30	29	28	26.5	25	23	21	19
CPm 190	**CP 190**	1.5	2		50	–	–	46	44.5	43	41.5	40	38	36	34.5	32.5	30.5	28	26		
–	**CP 200**	2.2	3		58	–	–	55	54.5	53.5	52	51	49.5	48	46	44.5	42.5	40.5	38.5	36	

Q = Flow rate **H** = Total manometric head **HS** = Suction height

Tolerance of characteristic curves in compliance with EN ISO 9906 App. A.

POS.	COMPONENT	CONSTRUCTION CHARACTERISTICS
1	PUMP BODY	Cast iron, complete with threaded ports in compliance with ISO 228/1
2	BODY BACKPLATE	Stainless steel AISI 304 (cast iron for CP 190-200)
3	IMPELLER	Stainless steel AISI 304
4	MOTOR SHAFT	Stainless steel EN 10088-3 - 1.4104

5 MECHANICAL SEAL

Pump	*Seal*	*Shaft*	*Materials*		
Model	*Model*	*Diameter*	*Stationary ring*	*Rotational ring*	*Elastomer*
CP 100-130-132A	**AR-12**	**Ø 12** mm	Ceramic	Graphite	NBR
CP 150-158	**AR-14**	**Ø 14** mm	Ceramic	Graphite	NBR
CP 170-170M-190-200	**FN-18**	**Ø 18** mm	Graphite	Ceramic	NBR

6 BEARINGS

Pump	*Model*
CP 100-130-132A	**6201 ZZ / 6201 ZZ**
CP 150-158	**6203 ZZ / 6203 ZZ**
CP 170-170M	**6204 ZZ / 6204 ZZ**
CP 190-200	**6304 ZZ / 6204 ZZ**

7 CAPACITOR

Pump	*Capacitance*	
Single-phase	*(230 V or 240 V)*	*(110 V)*
CPm 100	**10** µF 450 VL	**25** µF 250 VL
CPm 130	**10** µF 450 VL	**30** µF 250 VL
CPm 132A	**14** µF 450 VL	**30** µF 250 VL
CPm 150-158	**20** µF 450 VL	**60** µF 300 VL
CPm 170-170M	**25** µF 450 VL	**60** µF 250 VL
CPm 190	**45** µF 450 VL	**80** µF 250 VL

8 ELECTRIC MOTOR

CPm: single-phase 230 V - 50 Hz with thermal overload protector built-in to the winding.
CP: three-phase 230/400 V - 50 Hz.

➠ **Pumps fitted with the three-phase motor option offer IE2 (IEC 60034-30) class high performance**

– Insulation: F class.
– Protection: IP 44.

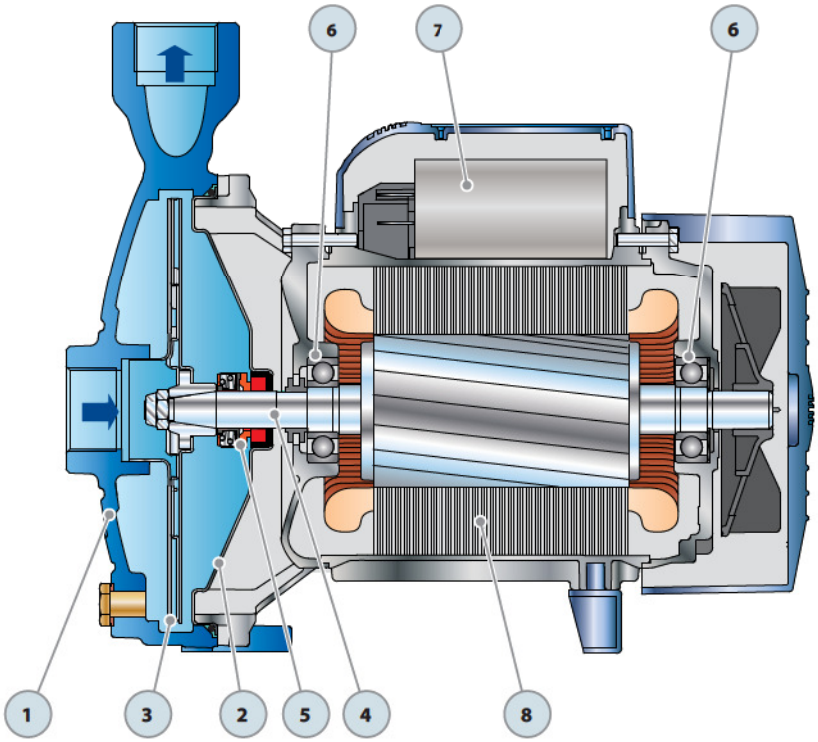

DIMENSIONS AND WEIGHT

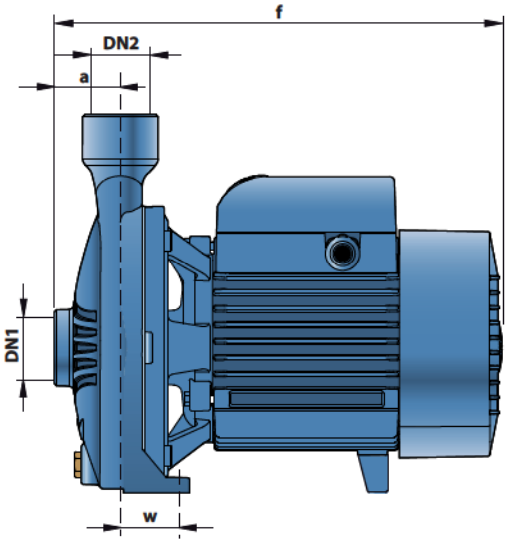

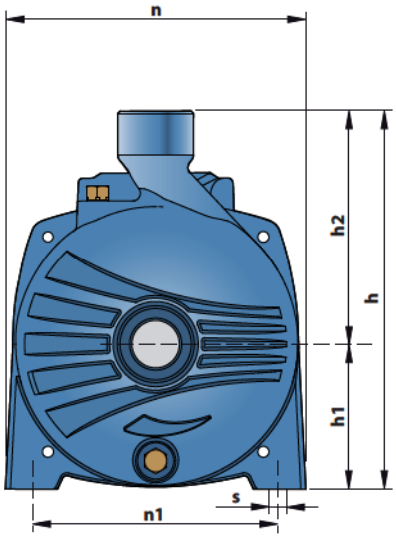

MODEL		PORTS		DIMENSIONS mm									kg	
Single-phase	Three-phase	DN1	DN2	a	f	h	h1	h2	n	n1	w	s	1~	3~
CPm 100	–	1″	1″	42	259	192	82	110	165	135	41	10	**6.9**	–
CPm 130	CP 130					205	82	123					**7.6**	**7.1**
CPm 132A	CP 132A												**8.3**	**8.0**
CPm 150	CP 150				285	240	92	148	190	160	38		**12.4**	**11.4**
CPm 158	CP 158												**12.0**	**11.0**
CPm 170 - 170M	CP 170 - 170M	1¼″	1″	51	367	260	110	150	206	165	44.5	11	**17.8**	**17.2**
CPm 190	CP 190				364	290	115	175	242	206	32.5		**22.3**	**21.3**
–	CP 200												–	**22.5**

ABSORPTION

MODEL	VOLTAGE (single-phase)		
Single-phase	230 V	240 V	110 V
CPm 100	**1.9** A	**1.55** A	**3.3** A
CPm 130	**3.2** A	**2.9** A	**6.4** A
CPm 132A	**3.5** A	**3.2** A	**7.0** A
CPm 150	**5.7** A	**5.4** A	**11.4** A
CPm 158	**6.0** A	**5.8** A	**12.0** A
CPm 170 - 170M	**7.8** A	**7.2** A	**16.0** A
CPm 190	**11.0** A	**10.0** A	**22.0** A

MODEL	VOLTAGE (three-phase)			
Three-phase	230 V	400 V	240 V	415 V
CP 130	**2.0** A	**1.2** A	**1.8** A	**1.1** A
CP 132A	**2.9** A	**1.7** A	**2.4** A	**1.4** A
CP 150	**4.2** A	**2.4** A	**4.1** A	**2.4** A
CP 158	**4.4** A	**2.5** A	**4.3** A	**2.5** A
CP 170 - 170M	**5.2** A	**3.0** A	**5.1** A	**2.9** A
CP 190	**7.5** A	**4.3** A	**7.3** A	**4.2** A
CP 200	**9.0** A	**5.2** A	**8.3** A	**4.8** A

PALLETIZATION

MODEL		GROUPAGE				CONTAINER			
		n°	H	kg		n°	H	kg	
Single-phase	Three-phase	pumps	(mm)	1~	3~	pumps	(mm)	1~	3~
CPm 100	–	**105**	1280	741	–	**189**	2190	1321	–
CPm 130	CP 130	**105**	1280	820	770	**189**	2190	1460	1360
CPm 132A	CP 132A	**105**	1280	890	860	**189**	2190	1590	1530
CPm 150	CP 150	**70**	1450	890	820	**112**	2240	1410	1300
CPm 158	CP 158	**70**	1450	860	790	**112**	2240	1360	1250
CPm 170	CP 170	**50**	1560	900	870	**70**	2120	1250	1200
CPm 170M	CP 170M	**50**	1560	940	910	**70**	2120	1310	1260
CPm 190	CP 190	**36**	1410	820	790	**54**	2040	1220	1170
–	CP 200	**36**	1410	–	830	**54**	2040	–	1240

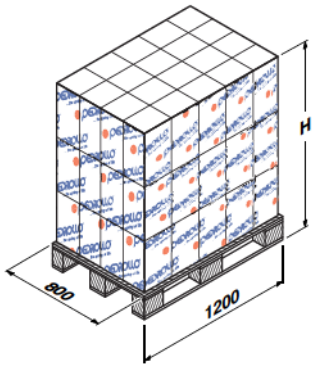

CP

Centrifugal pumps

PERFORMANCE RANGE

- Flow rate up to **900 l/min** (54 m^3/h)
- Head up to **74 m**

APPLICATION LIMITS

- Manometric suction lift up to **7 m**
- Liquid temperature between **-10 °C** and **+90 °C**
- Ambient temperature between **-10 °C** and **+40 °C**
- Max. working pressure **10 bar**
- Continuous service **S1**

CONSTRUCTION AND SAFETY STANDARDS

EN 60034-1
IEC 60034-1
CEI 2-3

CERTIFICATIONS

АИЗО

УкрТЕСТ-003

INSTALLATION AND USE

Suitable for use with clean water and liquids that are not chemically aggressive towards the materials from which the pump is made. As a result of their reliability and the fact that they are easy to use, these pumps are widely used in civil, agricultural and industrial applications such as for supplying water, in conditioning and cooling systems, for irrigation, etc.
The pump should be installed in an enclosed environment, or at least sheltered from inclement weather.

PATENTS - TRADE MARKS - MODELS

- Registered Italian model n° 72753

OPTIONALS AVAILABLE ON REQUEST

- Special mechanical seal
- EN 10088-3 - 1.4401 (AISI 316) stainless steel motor shaft
- Other voltages or 60 Hz frequency
- IP55 class protection

GUARANTEE

2 years subject to terms and conditions

PERFORMANCE RANGE **50 Hz** **n= 2900 1/min** HS= 0 m

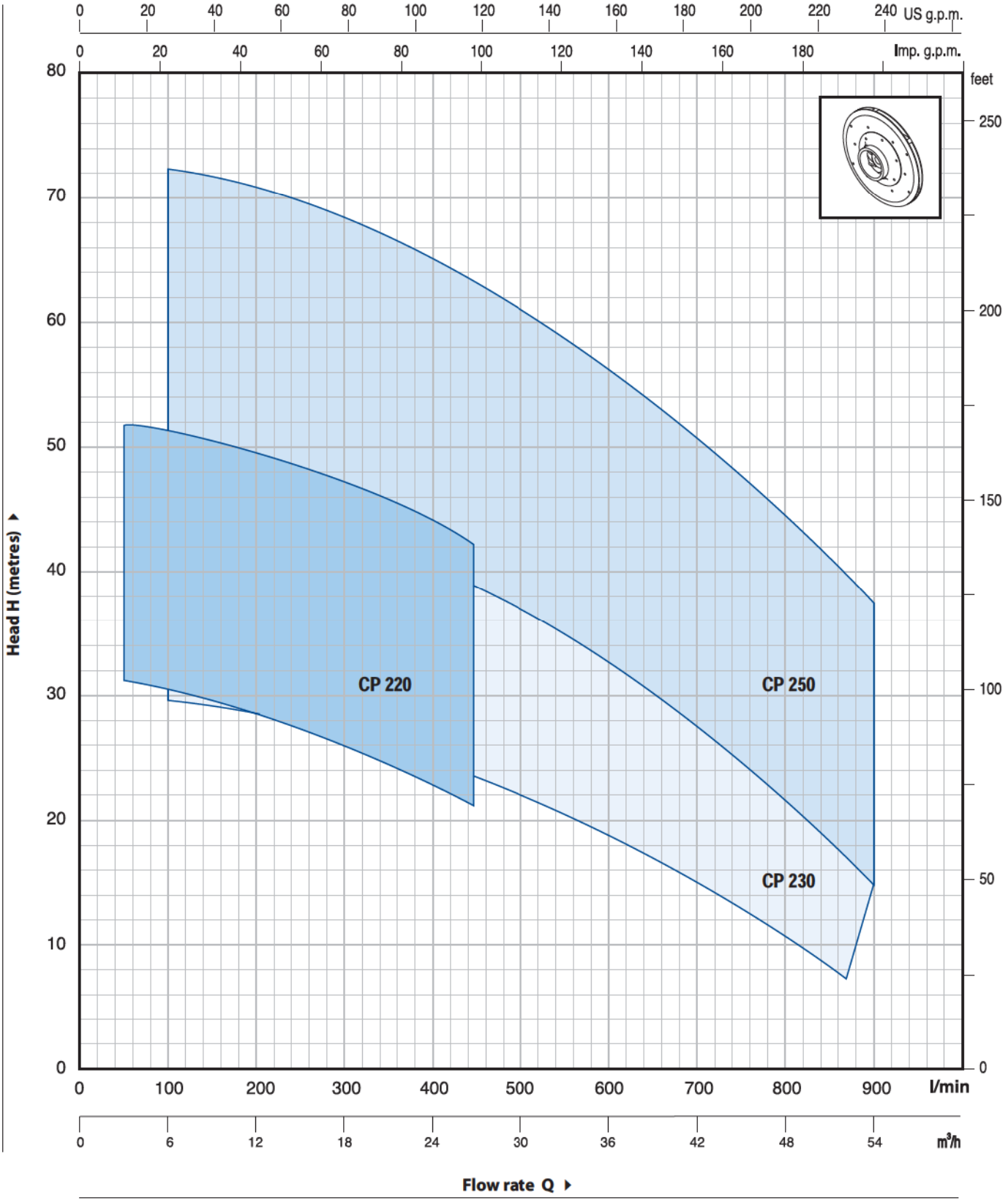

CP 220

CHARACTERISTIC CURVES AND PERFORMANCE DATA

50 Hz n= 2900 1/min HS= 0 m

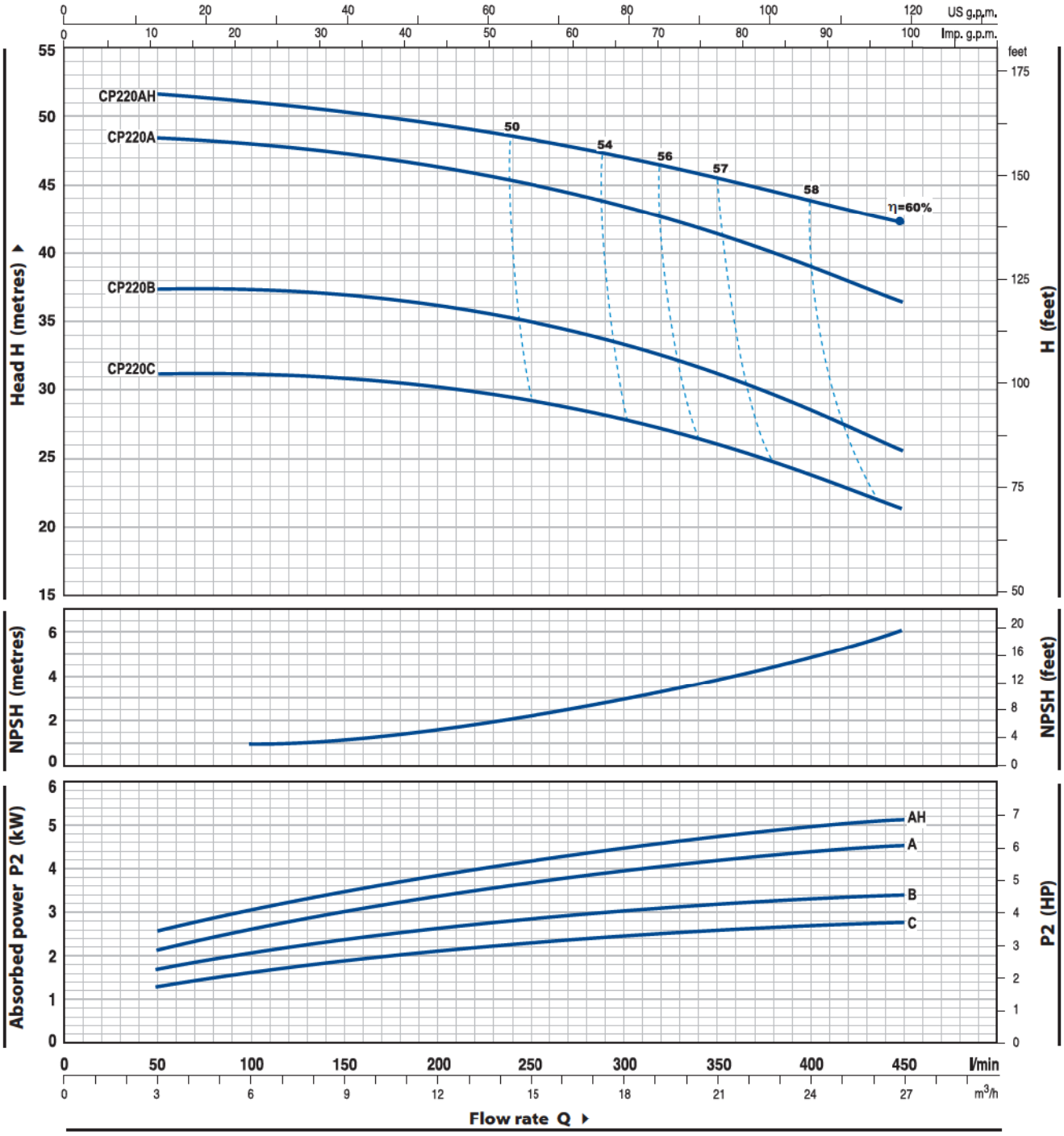

MODEL		POWER		Q m³/h	0	3	6	12	18	24	27
Single-phase	Three-phase	kW	HP	Q l/min	**0**	**50**	**100**	**200**	**300**	**400**	**450**
CPm 220C	**CP 220C**	2.2	3	H metres	32	31.5	31	30	28	24	21
–	**CP 220B**	3	4		38	37.5	37	36	33.5	29	25
–	**CP 220A**	4	5.5		49	48.5	48	46	43.5	39.5	36
–	**CP 220AH**	5.5	7.5		52	51.5	51	49	47	44	42

Q = Flow rate **H** = Total manometric head **HS** = Suction height

Tolerance of characteristic curves in compliance with EN ISO 9906 App. A.

CHARACTERISTIC CURVES AND PERFORMANCE DATA

50 Hz n= 2900 1/min HS= 0 m

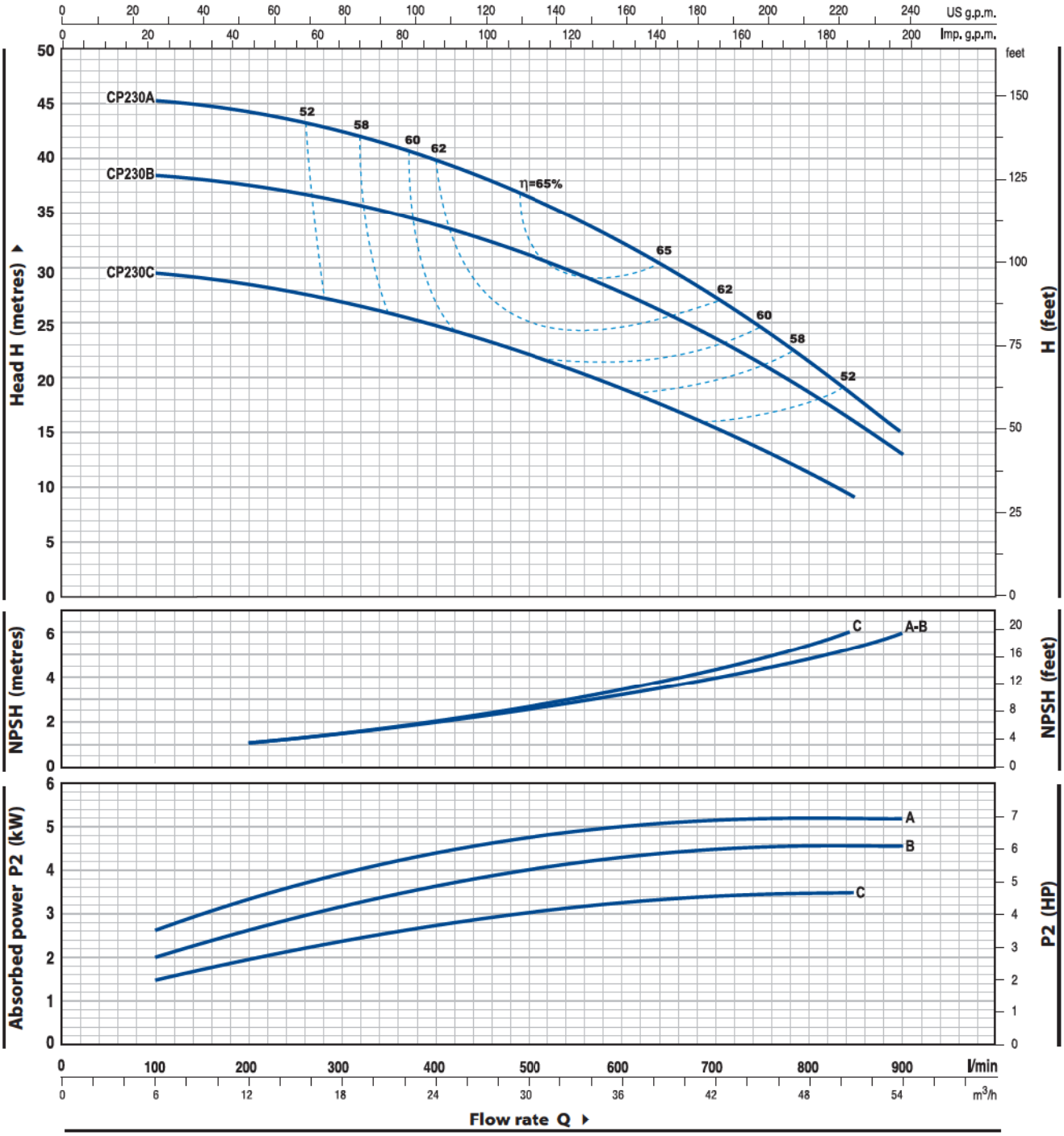

MODEL	POWER		Q m³/h	0	6	12	18	24	30	36	42	48	51	54
Three-phase	kW	HP	l/min	0	100	200	300	400	500	600	700	800	850	900
CP 230C	3	4	H metres	30	29.5	28.5	27	25	22	19.5	15.5	11.5	9	
CP 230B	4	5.5		39	38.5	38	36	34	31	28	24	18.5	15	13
CP 230A	5.5	7.5		46	45.5	44.5	42	40	37	32.5	27.5	21.5	18	15

Q = Flow rate **H** = Total manometric head **HS** = Suction height

Tolerance of characteristic curves in compliance with EN ISO 9906 App. A.

CP 250

CHARACTERISTIC CURVES AND PERFORMANCE DATA

50 Hz n= 2900 1/min HS= 0 m

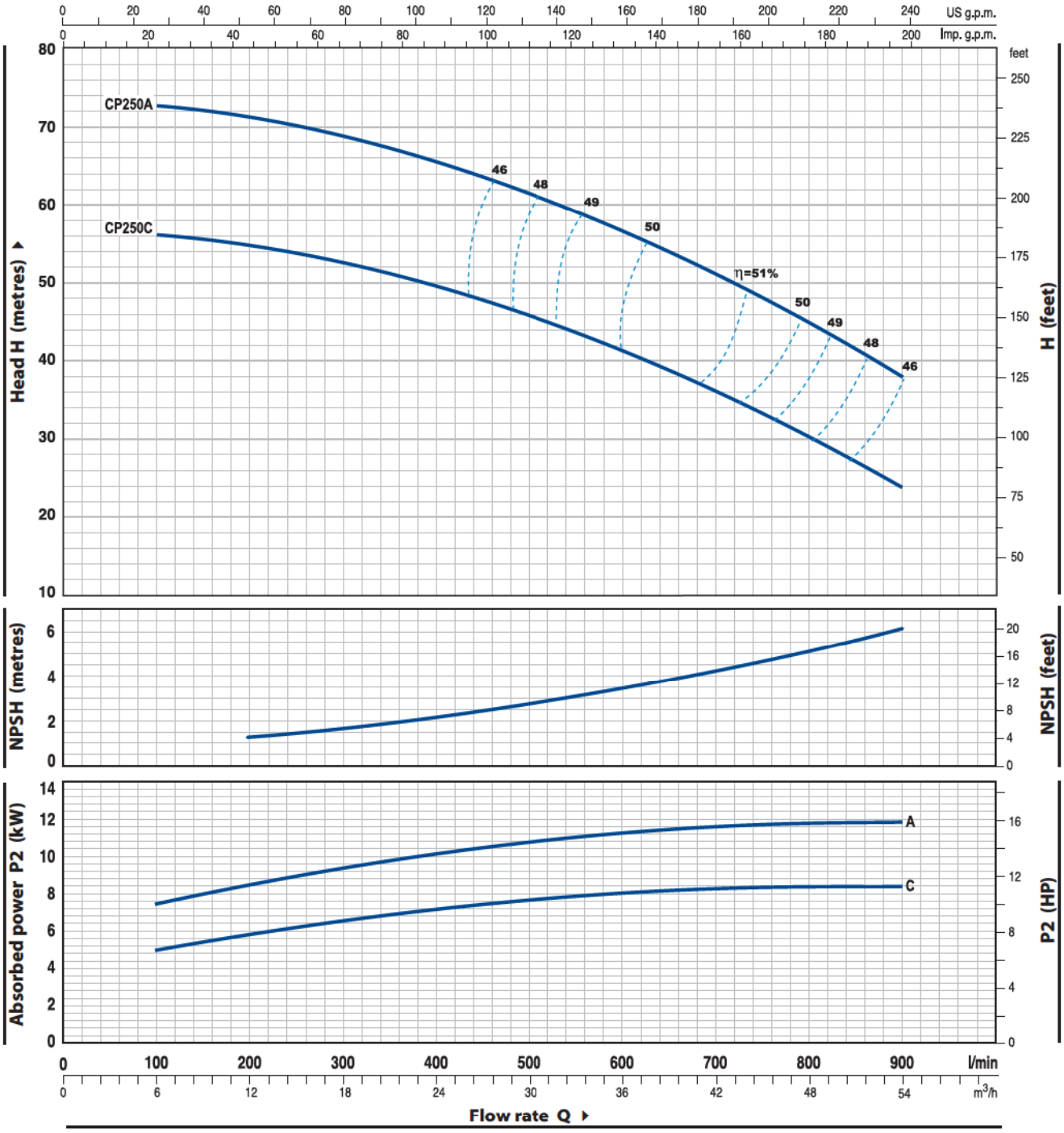

MODEL	POWER		Q m³/h	0	6	12	18	24	30	36	42	48	54
Three-phase	kW	HP	l/min	**0**	**100**	**200**	**300**	**400**	**500**	**600**	**700**	**800**	**900**
CP 250C	7.5	10	H metres	57	56	54.5	52.5	49.5	46	41.5	35.5	30	24
CP 250A	11	15		74	73	71	68	65	61	57	51	45	37

Q = Flow rate **H** = Total manometric head **HS** = Suction height

Tolerance of characteristic curves in compliance with EN ISO 9906 App. A.

CHARACTERISTIC CURVES AND PERFORMANCE DATA

50 Hz n= 2900 1/min HS= 0 m

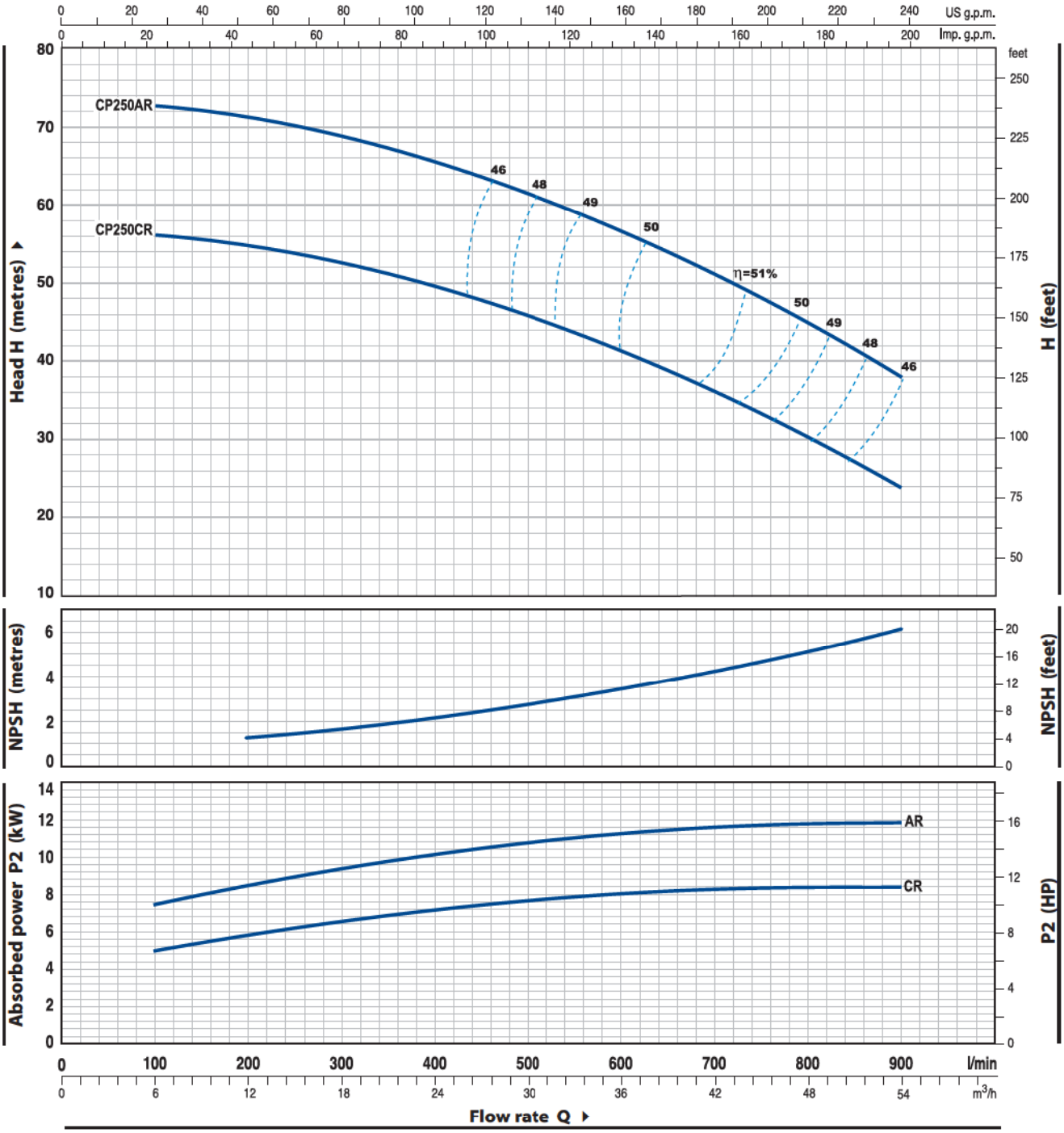

MODEL	POWER		Q m³/h	0	6	12	18	24	30	36	42	48	54
Three-phase	kW	HP	Q l/min	**0**	**100**	**200**	**300**	**400**	**500**	**600**	**700**	**800**	**900**
CP 250CR	7.5	10	H metres	57	56	54.5	52.5	49.5	46	41.5	35.5	30	24
CP 250AR	11	15		74	73	71	68	65	61	57	51	45	37

Q = Flow rate **H** = Total manometric head **HS** = Suction height

Tolerance of characteristic curves in compliance with EN ISO 9906 App. A.

POS.	COMPONENT	CONSTRUCTION CHARACTERISTICS
1	PUMP BODY	Cast iron, complete with threaded ports in compliance with ISO 228/1
2	BODY BACKPLATE	Cast iron
3	IMPELLER	Brass for CP 220, CP 230 Cast iron for CP 250
4	MOTOR SHAFT	Stainless steel EN 10088-3 - 1.4104

5 MECHANICAL SEAL

Pump Model	*Seal* Model	*Shaft* Diameter	*Materials* Stationary ring	Rotational ring	Elastomer
CP 220C-B **CP 230C**	**FN-20**	**Ø 20** mm	Graphite	Ceramic	NBR
CP 220A-AH **CP 230B-A** **CP 250C-CR**	**FN-24**	**Ø 24** mm	Graphite	Ceramic	NBR
CP 250A-AR	**FN-32 NU**	**Ø 32** mm	Graphite	Ceramic	NBR

6 BEARINGS

Pump	*Model*
CP 220C	**6206 ZZ - C3 / 6204 ZZ**
CPm 220C **CP 220B** **CP 230C**	**6206 ZZ - C3 / 6205 ZZ**
CP 220A-AH **CP 230B-A** **CP 250C-CR**	**6307 ZZ - C3 / 6206 ZZ - C3**
CP 250A-AR	**6310 ZZ - C3 / 6308 ZZ - C3**

7 CAPACITOR

Pump Single-phase	*Capacitance* (230 V or 240 V)
CPm 220C	**70** µF 450 VL

8 ELECTRIC MOTOR

CPm: single-phase 230 V - 50 Hz.
CP: three-phase 230/400 V - 50 Hz up to 4 kW.
400/690 V - 50 Hz from 5.5 to 11 kW.

➡ **Pumps fitted with the three-phase motor option offer IE2 (IEC 60034-30) class high performance**

– Insulation: F class.
– Protection: IP 44.

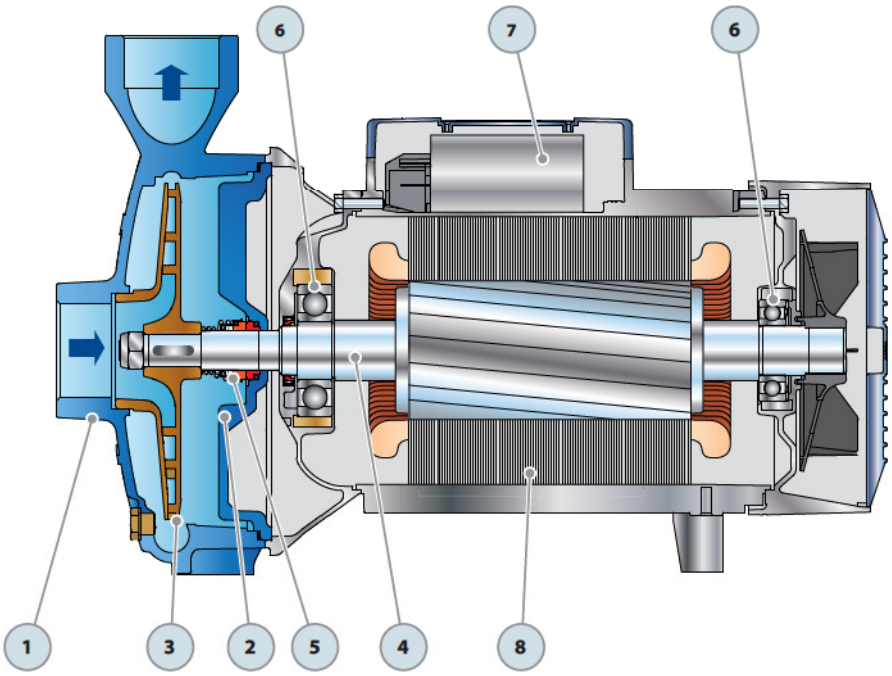

DIMENSIONS AND WEIGHT

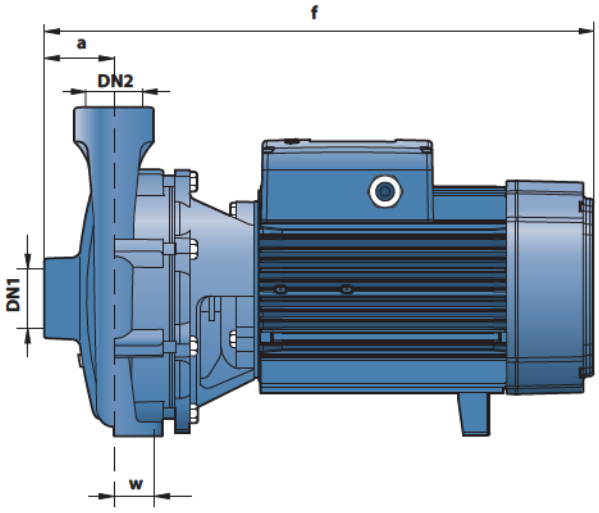

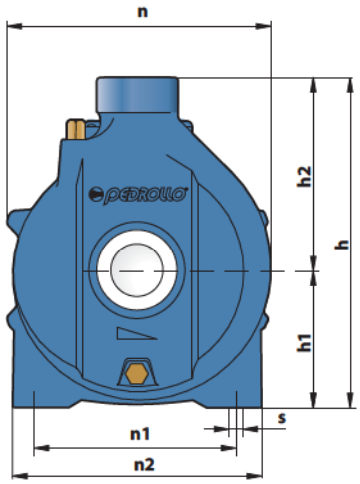

MODEL		PORTS		DIMENSIONS mm										kg	
Single-phase	Three-phase	DN1	DN2	a	f	h	h1	h2	n	n1	n2	w	s	1~	3~
CPm 220C	CP 220C	2"	2"	70	426/409	315	132	183	255	170	230	40	14	**31.5**	**28.5**
–	CP 220B				426									–	**31.9**
–	CP 220A				460	328	136	192	273	190	250			–	**41.0**
–	CP 220AH				505									–	**46.0**
–	CP 230C				426	315	132	183	255	170	230			–	**31.5**
–	CP 230B				460	328	136	192	273	190	250			–	**41.0**
–	CP 230A				505									–	**46.0**
–	CP 250C			65	507	392	160	232	322	230	294	45		–	**74.0**
–	CP 250A				571									–	**103.0**
–	CP 250CR	4"	3"	92	534									–	**78.0**
–	CP 250AR				598									–	**107.0**

ABSORPTION

MODEL	VOLTAGE (single-phase)	
Single-phase	230 V	240 V
CPm 220C	**15.8** A	**15.0** A

MODEL	VOLTAGE (three-phase)					
Three-phase	230 V	400 V	690 V	240 V	415 V	720 V
CP 220C	**11.4** A	**6.6** A	**3.8** A	**10.7** A	**6.2** A	**3.6** A
CP 220B	**12.6** A	**7.3** A	**4.2** A	**12.0** A	**7.0** A	**4.0** A
CP 220A	**17.0** A	**9.8** A	**5.7** A	**16.5** A	**9.5** A	**5.5** A
CP 220AH	**20.0** A	**11.5** A	**6.7** A	**21.0** A	**12.0** A	**6.9** A
CP 230C	**13.2** A	**7.6** A	**4.4** A	**11.1** A	**6.4** A	**3.7** A
CP 230B	**16.8** A	**9.7** A	**5.6** A	**16.2** A	**9.4** A	**5.4**A
CP 230A	**20.0** A	**11.5**A	**6.7** A	**19.2** A	**11.0** A	**6.4** A
CP 250C-CR	**28.6** A	**16.5** A	**9.5** A	**27.5** A	**16.0** A	**9.3** A
CP 250A-AR	**40.8** A	**23.6** A	**13.7** A	**40.8** A	**23.6** A	**13.7** A

PALLETIZATION

MODEL		GROUPAGE				CONTAINER			
		n°	H	kg		n°	H	kg	
Single-phase	Three-phase	pumps	(mm)	1~	3~	pumps	(mm)	1~	3~
CPm 220C	CP 220C	**18**	1220	590	530	**24**	1580	780	700
–	CP 220B	**18**	1180	–	600	**24**	1520	–	790
–	CP 220A	**18**	1430	–	760	**24**	1860	–	1000
–	CP 220AH	**12**	1430	–	570	**16**	1860	–	760
–	CP 230C	**18**	1200	–	590	**24**	1550	–	780
–	CP 230B	**18**	1430	–	760	**24**	1860	–	1000
–	CP 230A	**12**	1430	–	570	**16**	1860	–	760
–	CP 250C	**6**	1180	–	460	–	–	–	–
–	CP 250A	**6**	1180	–	640	–	–	–	–
–	CP 250CR	**6**	1180	–	490	–	–	–	–
–	CP 250AR	**6**	1180	–	660	–	–	–	–

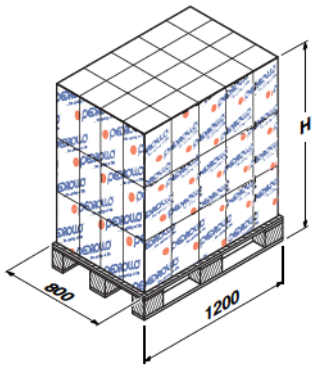

CP

Centrifugal pumps

PERFORMANCE RANGE

- Flow rate up to **250 l/min** (15 m^3/h)
- Head up to **57 m**

APPLICATION LIMITS

- Manometric suction lift up to **7 m**
- Liquid temperature between **-10 °C** and **+90 °C**
- Ambient temperature between **-10 °C** and **+40 °C**
- Max. working pressure **10 bar**
- Continuous service **S1**

CONSTRUCTION AND SAFETY STANDARDS

EN 60034-1
IEC 60034-1
CEI 2-3

CERTIFICATIONS

АИЗО

УкрТЕСТ-003

INSTALLATION AND USE

Suitable for use with clean water and liquids that are not chemically aggressive towards the materials from which the pump is made. The pumps in this series are specifically intended for use in the civil, industrial and agricultural sectors where their overriding characteristics of sturdiness and reliability are best appreciated. The pump should be installed in an enclosed environment, or at least sheltered from inclement weather.

OPTIONALS AVAILABLE ON REQUEST

- Special mechanical seal
- Other voltages or 60 Hz frequency

GUARANTEE

2 years subject to terms and conditions

CHARACTERISTIC CURVES AND PERFORMANCE DATA

50 Hz n= 2900 1/min HS= 0 m

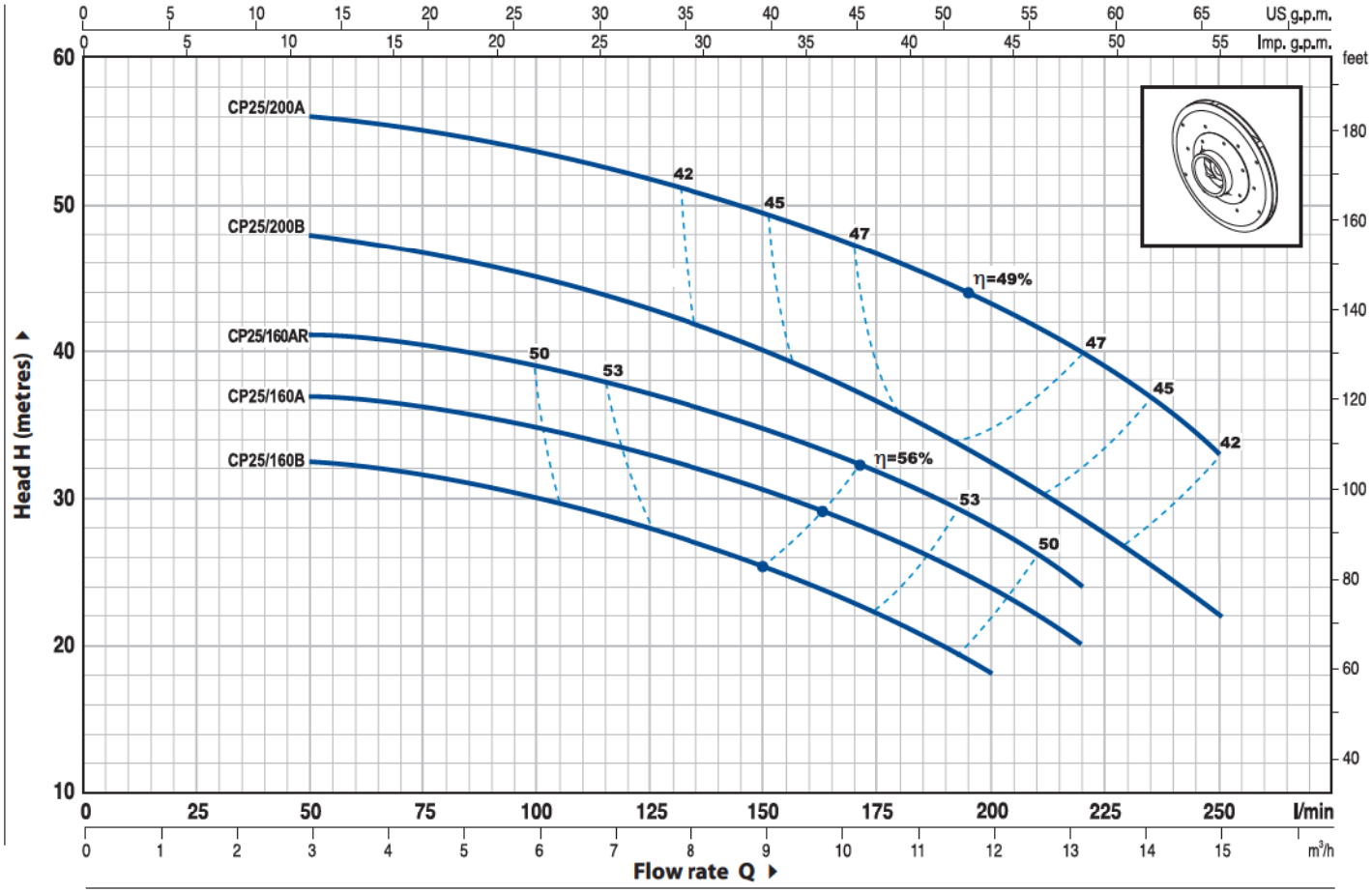

MODEL		POWER		Q	m³/h	0	3.0	3.6	4.2	4.8	5.4	6.0	6.6	7.5	8.4	9.6	10.8	12.0	13.2	15.0
Single-phase	Three-phase	kW	HP		l/min	**0**	**50**	**60**	**70**	**80**	**90**	**100**	**110**	**125**	**140**	**160**	**180**	**200**	**220**	**250**
CPm 25/160B	**CP 25/160B**	1.1	1.5			33	32.5	32	31.5	31	30.5	30	29	28	26.5	24	21.5	18		
CPm 25/160A	**CP 25/160A**	1.5	2			38	37	36.8	36.5	36	35.5	35	34	33	31.5	29.5	27	24	20	
–	**CP 25/160AR**	2.2	3	**H**	metres	42	41	41	40.5	40	39.5	39	38	37	36	34	31	28	24	
CPm 25/200B	**CP 25/200B**	2.2	3			49	48	47.5	47	46.5	45.5	45	44	43	41	38.5	36	32	28	22
–	**CP 25/200A**	3	4			57	56	55.8	55.5	55	54.5	53.5	53	52	50.5	48.5	46	43.5	40	33

Q = Flow rate **H** = Total manometric head **HS** = Suction height

Tolerance of characteristic curves in compliance with EN ISO 9906 App. A.

POS.	COMPONENT	CONSTRUCTION CHARACTERISTICS
1	**PUMP BODY**	Cast iron, made to EN 733 standards, complete with threaded ports in compliance with ISO 228/1
2	**BODY BACKPLATE**	Cast iron
3	**IMPELLER**	Brass
4	**MOTOR SHAFT**	Stainless steel EN 10088-3 - 1.4104

5 MECHANICAL SEAL

Pump	*Seal*	*Shaft*	*Materials*		
Model	*Model*	*Diameter*	*Stationary ring*	*Rotational ring*	*Elastomer*
CP 25/160	**FN-18**	**Ø 18** mm	Graphite	Ceramic	NBR
CP 25/200	**FN-24**	**Ø 24** mm	Graphite	Ceramic	NBR

6 BEARINGS

Pump	*Model*
CP 25/160	**6204 ZZ / 6204 ZZ**
CP 25/200	**6206 ZZ - C3 / 6205 ZZ**

7 CAPACITOR

Pump	*Capacitance*	
Single-phase	*(230 V or 240 V)*	*(110 V)*
CPm 25/160B	**31.5** µF 450 VL	**60** µF 250 VL
CPm 25/160A	**45** µF 450 VL	**80** µF 250 VL
CPm 25/200B	**70** µF 450 VL	–

8 ELECTRIC MOTOR

CPm: single-phase 230 V - 50 Hz with thermal overload protector built-in to the winding (up to 1.5 kW).
CP: three-phase 230/400 V - 50 Hz.

➡ **Pumps fitted with the three-phase motor option offer IE2 (IEC 60034-30) class high performance**

– Insulation: F class.
– Protection: IP 44.

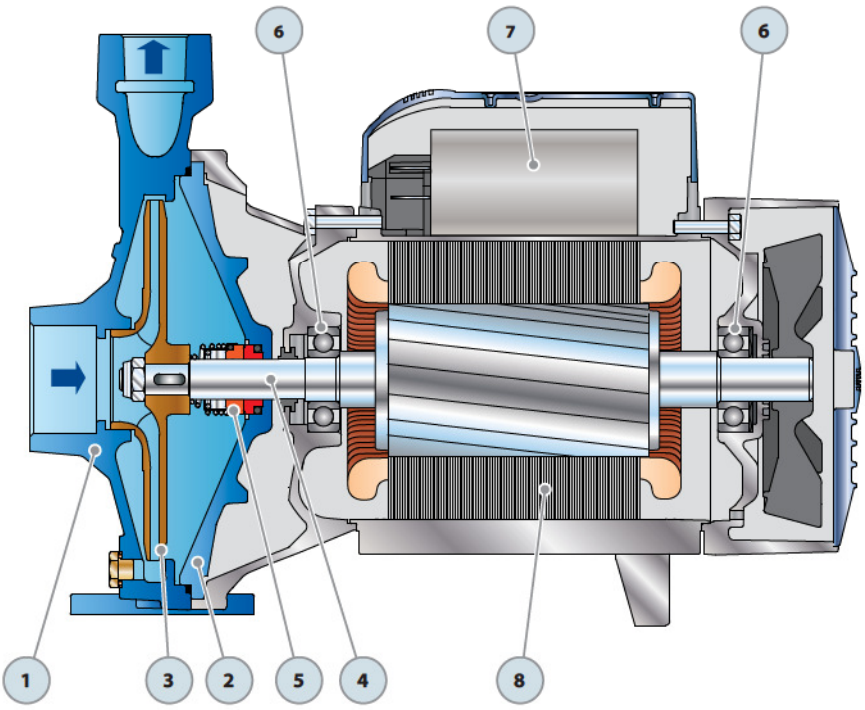

DIMENSIONS AND WEIGHT

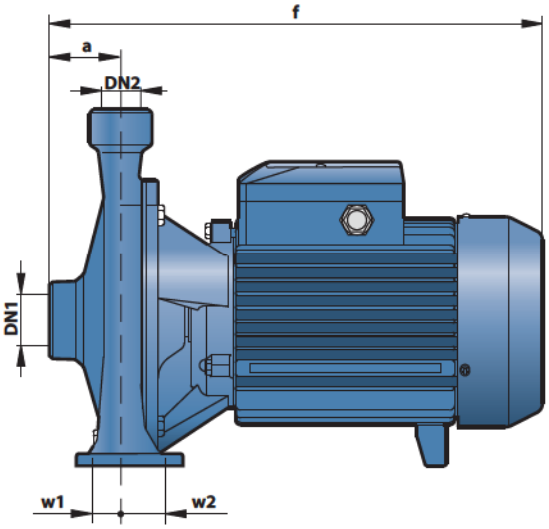

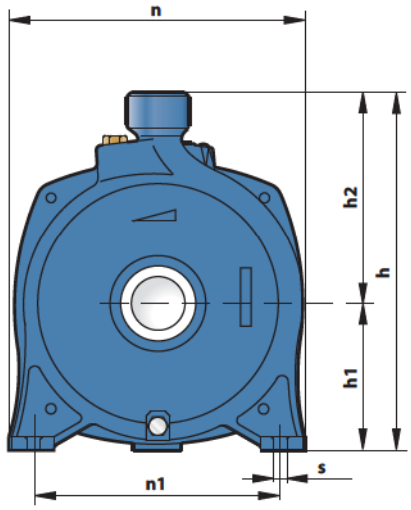

MODEL		PORTS		DIMENSIONS mm										kg	
Single-phase	Three-phase	DN1	DN2	a	f	h	h1	h2	n	n1	w1	w2	s	1~	3~
CPm 25/160B	CP 25/160B	1½"	1"	56	375	260	105	155	206	150	27.5	27.5	10	**20.0**	**18.0**
CPm 25/160A	CP 25/160A													**21.3**	**21.3**
–	CP 25/160AR													–	**21.3**
CPm 25/200B	CP 25/200B			60	390/365	305	125	180	252	210	23.5	39.5	11	**28.5**	**30.7**
–	CP 25/200A				390									–	**30.9**

ABSORPTION

MODEL	VOLTAGE (single-phase)		
Single-phase	230 V	240 V	110 V
CPm 25/160B	**8.5** A	**7.8** A	**17.0** A
CPm 25/160A	**9.8** A	**8.9** A	**19.6** A
CPm 25/200B	**13.4** A	**13.0** A	–

MODEL	VOLTAGE (three-phase)					
Three-phase	230 V	400 V	690 V	240 V	415 V	720 V
CP 25/160B	**5.7** A	**3.3** A	**1.9** A	**5.2** A	**3.0** A	**1.7** A
CP 25/160A	**7.3** A	**4.2** A	**2.4** A	**6.7** A	**3.9** A	**2.3** A
CP 25/160AR	**8.9** A	**5.1** A	**3.0** A	**8.3** A	**4.8** A	**2.8** A
CP 25/200B	**10.5** A	**6.0** A	**3.5** A	**9.6** A	**5.6** A	**3.3** A
CP 25/200A	**12.4** A	**7.2** A	**4.2** A	**11.0** A	**6.4** A	**3.7** A

PALLETIZATION

MODEL		GROUPAGE				CONTAINER			
		n°	H	kg		n°	H	kg	
Single-phase	Three-phase	pumps	(mm)	1~	3~	pumps	(mm)	1~	3~
CPm 25/160B	CP 25/160B	**50**	1560	1020	920	**70**	2130	1420	1280
CPm 25/160A	CP 25/160A	**50**	1560	1090	1040	**70**	2130	1510	1440
–	CP 25/160AR	**50**	1560	–	1090	**70**	2130	–	1510
CPm 25/200B	CP 25/200B	**18**	1190	530	570	–	–	–	–
–	CP 25/200A	**18**	1210	–	580	–	–	–	–

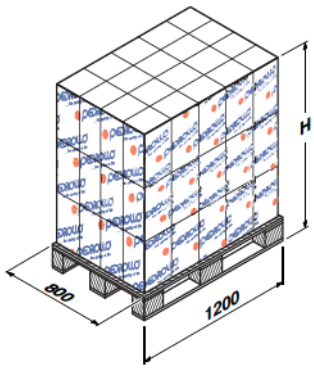

AL-RED

Stainless steel centrifugal pump

PERFORMANCE RANGE

- Maximum flow rate **160 l/min** (9.6 m^3/h)
- Maximum head **23 m**

APPLICATION LIMITS

- Manometric suction lift up to **7 m**
- Liquid temperature between **-10 °C** and **+90 °C**
- Ambient temperature between **-10 °C** and **+40 °C**
- Max. working pressure **6 bar**
- Continuous service **S1**

CONSTRUCTION AND SAFETY STANDARDS

EN 60034-1
IEC 60034-1
CEI 2-3

CERTIFICATIONS

АИЗО

УкрТЕСТ-003

INSTALLATION AND USE

Suitable for use with clean water and liquids that are not chemically aggressive towards the materials from which the pump is made. As a result of their construction characteristics, these centrifugal pumps are suitable for use in the domestic, agricultural and industrial sectors. All of the components in contact with the pumped liquid are constructed from stainless steel AISI 304, thus guaranteeing complete hygiene and maximum resistance against corrosion. The pump should be installed in an enclosed environment, or at least sheltered from inclement weather.

PATENTS - TRADE MARKS - MODELS

- Registered Community Design n° 342159-0003.
- AL-RED® is a registered trade mark.

OPTIONALS AVAILABLE ON REQUEST

- Special mechanical seal
- EN 10088-3 - 1.4401 (AISI 316) stainless steel motor shaft
- Other voltages or 60 Hz frequency

GUARANTEE

2 years subject to terms and conditions

CHARACTERISTIC CURVES AND PERFORMANCE DATA

50 Hz n= 2900 1/min HS= 0 m

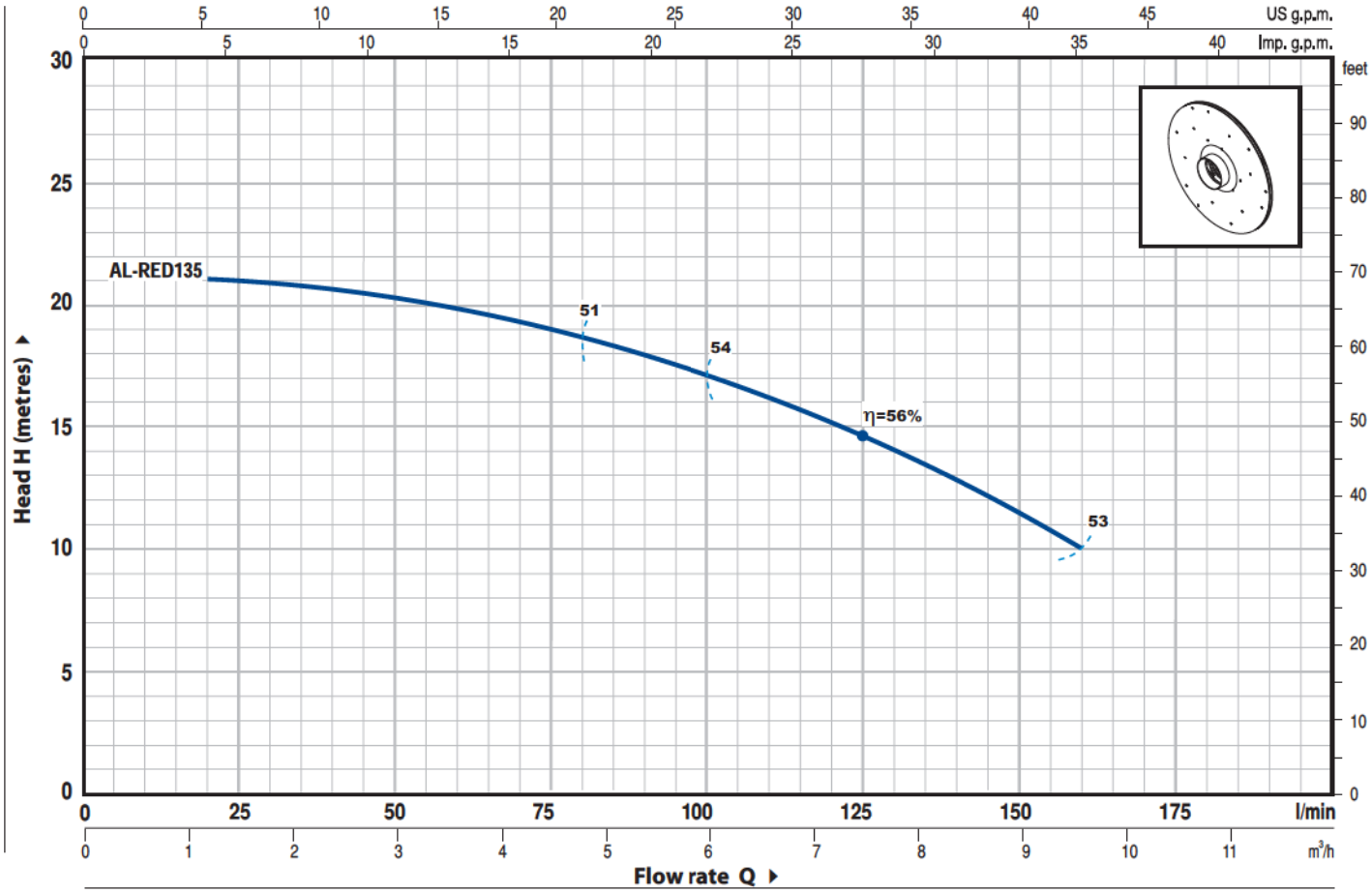

MODEL		POWER		Q										
Single-phase	Three-phase	kW	HP		m³/h	0	1.2	2.4	3.6	4.8	6.0	7.2	8.4	9.6
					l/min	**0**	**20**	**40**	**60**	**80**	**100**	**120**	**140**	**160**
AL-RED 135m	**AL-RED 135**	0.75	1	**H**	metres	23	21	20.5	20	18.5	17	15	13	10

Q = Flow rate **H** = Total manometric head **HS** = Suction height

Tolerance of characteristic curves in compliance with EN ISO 9906 App. A.

POS.	COMPONENT	CONSTRUCTION CHARACTERISTICS
1	**PUMP BODY**	Stainless steel AISI 304, complete with threaded ports in compliance with ISO 228/1
2	**BODY BACKPLATE**	Stainless steel AISI 304
3	**IMPELLER**	Stainless steel AISI 304
4	**MOTOR SHAFT**	Stainless steel EN 10088-3 - 1.4104

5 MECHANICAL SEAL

Seal	*Shaft*	*Materials*		
Model	***Diameter***	*Stationary ring*	*Rotational ring*	*Elastomer*
MG1-14	**Ø 14** mm	Ceramic	Graphite	NBR

6 BEARINGS — **6203 ZZ / 6203 ZZ**

7 CAPACITOR

Capacitance	
(230 V or 240 V)	***(110 V)***
20 µF 450 VL	**60** µF 300 VL

8 ELECTRIC MOTOR

AL-RED 135m: single-phase 230 V - 50 Hz with thermal overload protector built-in to the winding.
AL-RED 135: three-phase 230/400 V - 50 Hz.

➡ **Pump fitted with the three-phase motor option offers IE2 (IEC 60034-30) class high performance**

– Insulation: F class.
– Protection: IP 44.

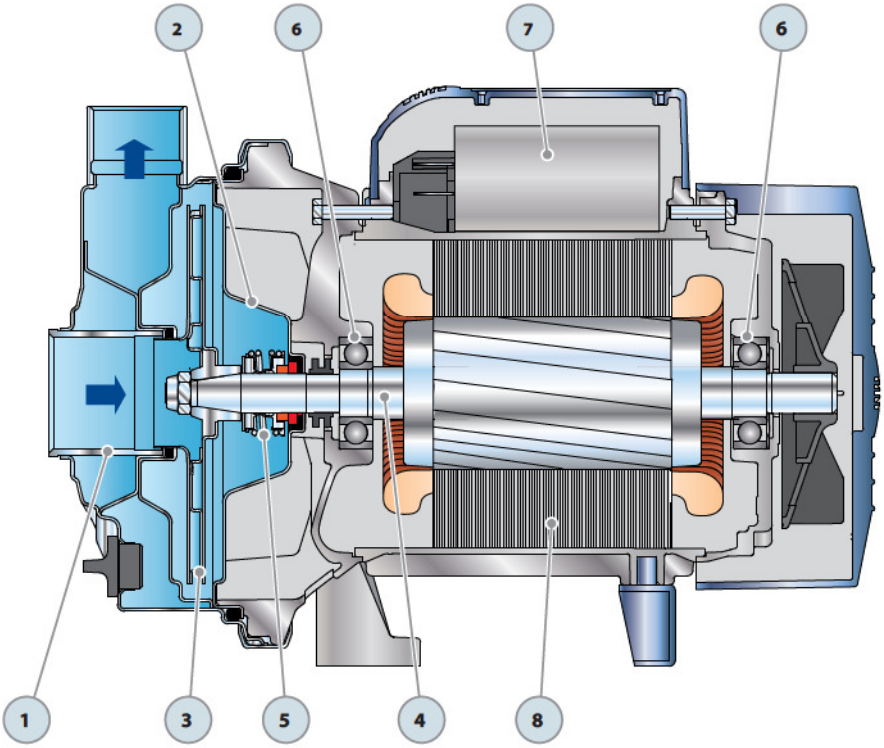

DIMENSIONS AND WEIGHT

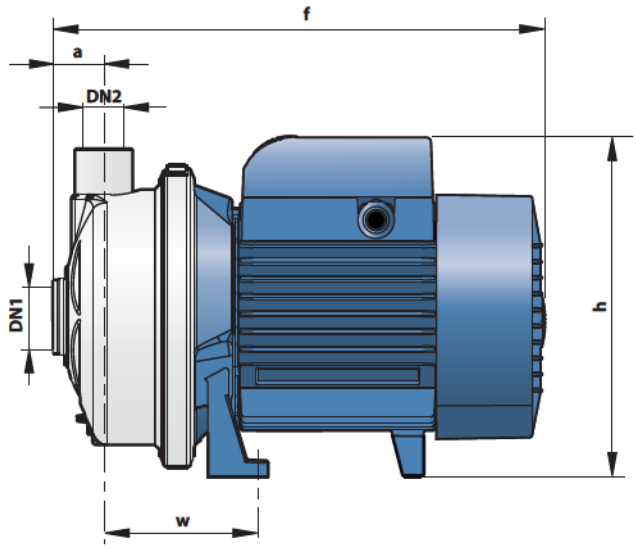

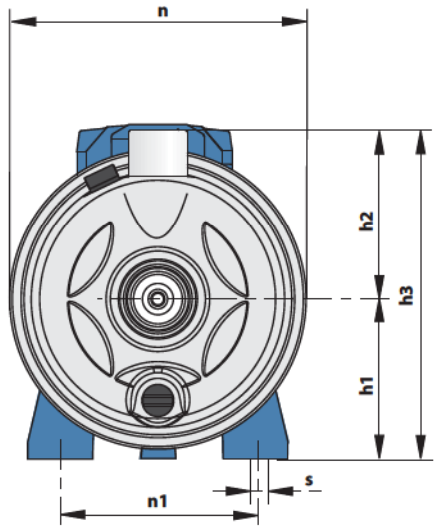

MODEL		PORTS		DIMENSIONS mm										kg	
Single-phase	Three-phase	DN1	DN2	a	f	h	h1	h2	h3	n	n1	w	s	1~	3~
AL-RED 135m	AL-RED 135	**1¼"**	**1"**	31.5	295	206	97	103	200	182	115	93	10	**9.0**	**8.9**

ABSORPTION

MODEL	VOLTAGE (single-phase)		
Single-phase	230 V	240 V	110 V
AL-RED 135m	**5.0** A	**4.8** A	**10.0** A

MODEL	VOLTAGE (three-phase)					
Three-phase	230 V	400 V	690 V	240 V	415 V	720 V
AL-RED 135	**3.1** A	**1.8** A	**1.0** A	**3.0** A	**1.7** A	**1.0** A

PALLETIZATION

MODEL		GROUPAGE				CONTAINER			
		n°	H	kg		n°	H	kg	
Single-phase	Three-phase	pumps	(mm)	1~	3~	pumps	(mm)	1~	3~
AL-RED 135m	AL-RED 135	**70**	1310	650	640	**112**	2020	1030	1020

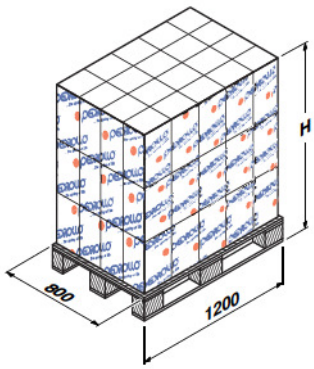

HF

Centrifugal pumps

Medium flow rates

PERFORMANCE RANGE

- Flow rate up to **600 l/min** (36 m^3/h)
- Head up to **39 m**

APPLICATION LIMITS

- Manometric suction lift up to **7 m**
- Liquid temperature between **-10 °C** and **+90 °C**
- Ambient temperature up to **+40 °C**
- Max. working pressure:
  - **6 bar** for HF 5-50-51
  - **10 bar** for HF 5M-60-70
- Continuous service **S1**

CONSTRUCTION AND SAFETY STANDARDS

EN 60034-1
IEC 60034-1
CEI 2-3

CERTIFICATIONS

АИЗО

УкрТЕСТ - 003

INSTALLATION AND USE

Suitable for use in civil and agricultural applications. The high efficiency and continuous duty capabilities makes these pumps ideal for use in activities such as flood and spray irrigation, drawing water from lakes, rivers and wells, or for any number of different industrial applications where the characteristics of high flow rates and mid to low head are required.
The pump should be installed in an enclosed environment, or at least sheltered from inclement weather.

OPTIONALS AVAILABLE ON REQUEST

- Special mechanical seal
- Other voltages or 60 Hz frequency
- IP55 class protection for HF 60, HF 70, HF 5BM, HF 5AM

GUARANTEE

2 years subject to terms and conditions

CHARACTERISTIC CURVES AND PERFORMANCE DATA

50 Hz n= 2900 1/min HS= 0 m

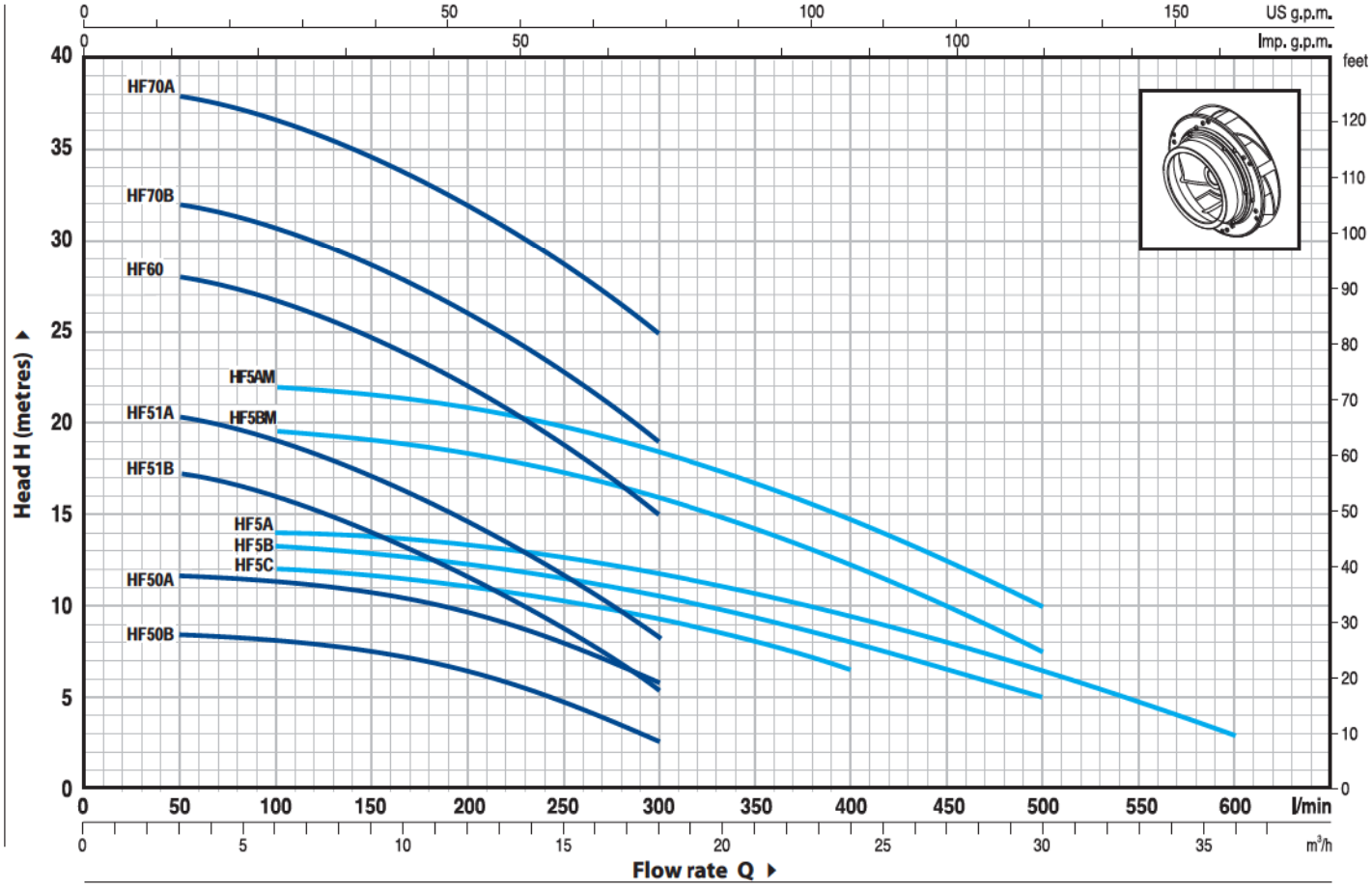

MODEL		POWER		Q m³/h	0	3	6	9	12	15	18	21	24	30	36
Single-phase	Three-phase	kW	HP	Q l/min	**0**	**50**	**100**	**150**	**200**	**250**	**300**	**350**	**400**	**500**	**600**
HFm 50B	**HF 50B**	0.37	0.50	H metres	9	8.5	8.2	7.5	6.3	4.9	2.8				
HFm 50A	**HF 50A**	0.55	0.75		12	11.5	11.2	10.6	9.6	8	6				
HFm 51B	**HF 51B**	0.60	0.85		18.2	17.2	16	14	11.5	9	5.4				
HFm 51A	**HF 51A**	0.75	1		21.2	20.2	19	17	14.5	11.6	8.4				
HFm 60	**HF 60**	1.1	1.5		29	28	26.5	24.5	22	18.5	15				
HFm 70B	**HF 70B**	1.5	2		33	32	30.5	28.5	26	22.5	19				
–	**HF 70A**	2.2	3		39	38	36.5	34.5	32	28.5	25				
HFm 5C	**HF 5C**	0.60	0.85		12.5	–	12	11.7	11	10.2	9.2	8	6.5		
HFm 5B	**HF 5B**	0.75	1		13.7	–	13.2	13	12.5	11.6	10.5	9.2	8	5	
HFm 5A	**HF 5A**	1.1	1.5		14.5	–	13.8	13.5	13.2	12.6	11.8	10.5	9.2	6.5	3
HFm 5BM	**HF 5BM**	1.1	1.5		20.2	–	19.2	19	18	17	16	14	12	7.5	
HFm 5AM	**HF 5AM**	1.5	2		22.5	–	22	21.5	21	20	18.5	16.6	14.5	10	

Q = Flow rate **H** = Total manometric head **HS** = Suction height

Tolerance of characteristic curves in compliance with EN ISO 9906 App. A.

POS.	COMPONENT	CONSTRUCTION CHARACTERISTICS
1	PUMP BODY	Cast iron, complete with threaded ports in compliance with ISO 228/1
2	BODY BACKPLATE	Stainless steel AISI 304 (cast iron for HF 60-70-5M)
3	IMPELLER	Brass
4	MOTOR SHAFT	Stainless steel EN 10088-3 - 1.4104

5 MECHANICAL SEAL

Pump	*Seal*	*Shaft*	*Materials*		
Model	*Model*	*Diameter*	*Stationary ring*	*Rotational ring*	*Elastomer*
HF 50	**AR-12**	**Ø 12** mm	Ceramic	Graphite	NBR
HF 5-51	**AR-14**	**Ø 14** mm	Ceramic	Graphite	NBR
HF 5M-60-70	**FN-18**	**Ø 18** mm	Graphite	Ceramic	NBR

6 BEARINGS

Pump	*Model*
HF 50	**6201 ZZ / 6201 ZZ**
HF 5-51	**6203 ZZ / 6203 ZZ**
HF 5M-60-70	**6204 ZZ / 6204 ZZ**

7 CAPACITOR

Pump	*Capacitance*	
Single-phase	*(230 V or 240 V)*	*(110 V)*
HFm 50B	**10** µF 450 VL	**30** µF 250 VL
HFm 50A	**14** µF 450 VL	**30** µF 250 VL
HFm 51B	**20** µF 450 VL	**60** µF 300 VL
HFm 51A	**20** µF 450 VL	**60** µF 300 VL
HFm 60	**25** µF 450 VL	**60** µF 250 VL
HFm 70B	**45** µF 450 VL	**80** µF 250 VL
HFm 5C	**16** µF 450 VL	**60** µF 300 VL
HFm 5B	**20** µF 450 VL	**60** µF 300 VL
HFm 5A	**25** µF 450 VL	**60** µF 300 VL
HFm 5BM	**25** µF 450 VL	**60** µF 250 VL
HFm 5AM	**45** µF 450 VL	**80** µF 250 VL

8 ELECTRIC MOTOR

HFm: single-phase 230 V - 50 Hz with thermal overload protector built-in to the winding.
HF: three-phase 230/400 V - 50 Hz.

➠ **Pumps fitted with the three-phase motor option offer IE2 (IEC 60034-30) class high performance**

– Insulation: F class.
– Protection: IP 44.

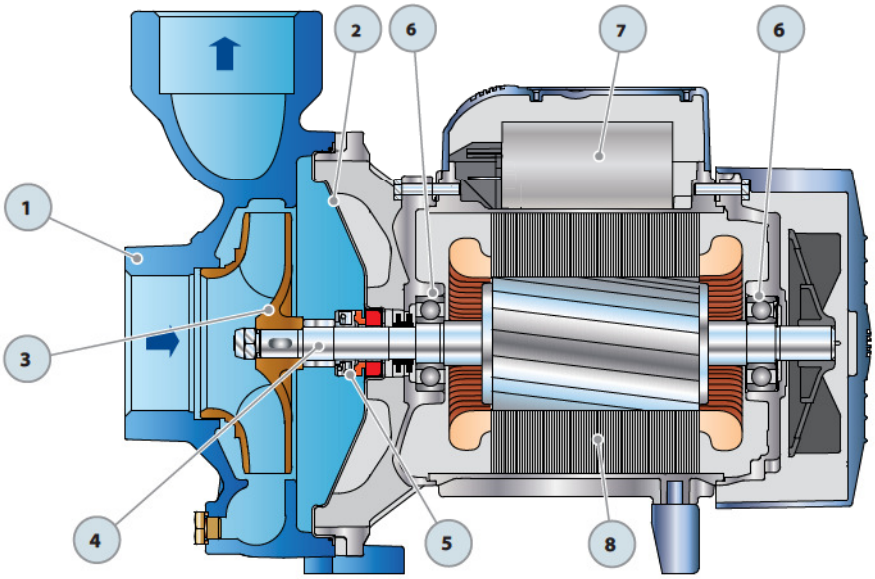

DIMENSIONS AND WEIGHT

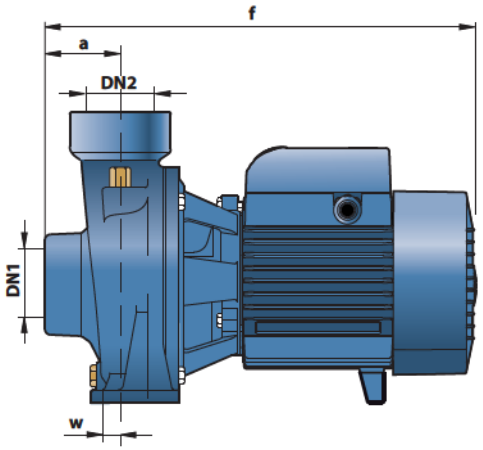

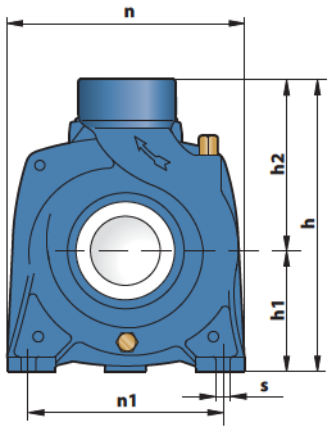

MODEL		PORTS		DIMENSIONS mm									kg	
Single-phase	Three-phase	DN1	DN2	a	f	h	h1	h2	n	n1	w	s	1~	3~
HFm 50B	HF 50B	1½"	1½"	45	276	200	82	118	165	135	1	10	**8.1**	**7.6**
HFm 50A	HF 50A				283/276								**8.7**	**8.3**
HFm 51B	HF 51B				300	225	92	133	190	160	4		**12.9**	**11.9**
HFm 51A	HF 51A												**13.0**	**12.0**
HFm 60	HF 60			48.5	373	269	114	155	216	171	12	12	**19.0**	**18.6**
HFm 70B	HF 70B												**21.8**	**20.5**
–	HF 70A												**–**	**21.9**
HFm 5C	HF 5C	2"	2"	60	332	238	97	141	196	160	14	11	**14.5**	**13.3**
HFm 5B	HF 5B												**14.5**	**13.3**
HFm 5A	HF 5A												**15.3**	**14.9**
HFm 5BM	HF 5BM			51	386	260	110	150	206		1		**19.5**	**18.9**
HFm 5AM	HF 5AM												**22.0**	**20.9**

ABSORPTION

MODEL	VOLTAGE (single-phase)		
Single-phase	230 V	240 V	110 V
HFm 50B	**2.8** A	**2.6** A	**5.6** A
HFm 50A	**3.8** A	**3.5** A	**7.6** A
HFm 51B	**4.7** A	**4.6** A	**9.2** A
HFm 51A	**5.6** A	**5.3** A	**11.2** A
HFm 60	**8.0** A	**7.6** A	**16.0** A
HFm 70B	**10.0** A	**9.0** A	**20.0** A
HFm 5C	**4.2** A	**3.8** A	**8.4** A
HFm 5B	**4.9** A	**4.5** A	**10.0** A
HFm 5A	**6.2** A	**5.7** A	**12.5** A
HFm 5BM	**7.7** A	**7.1** A	**14.8** A
HFm 5AM	**9.8** A	**9.0** A	**19.6** A

MODEL	VOLTAGE (three-phase)					
Three-phase	230 V	400 V	690 V	240 V	415 V	720 V
HF 50B	**2.1** A	**1.2** A	**0.7** A	**2.1** A	**1.2** A	**0.7** A
HF 50A	**3.0** A	**1.7** A	**1.0** A	**3.0** A	**1.75** A	**1.0** A
HF 51B	**3.6** A	**2.1** A	**1.2** A	**3.8** A	**2.2** A	**1.3** A
HF 51A	**4.4** A	**2.5** A	**1.5** A	**4.0** A	**2.3** A	**1.3** A
HF 60	**5.7** A	**3.3** A	**1.9** A	**5.5** A	**3.2** A	**1.8** A
HF 70B	**7.4** A	**4.3** A	**2.5** A	**7.1** A	**4.1** A	**2.4** A
HF 70A	**9.5** A	**5.5** A	**3.2** A	**9.1** A	**5.3** A	**3.1** A
HF 5C	**3.5** A	**2.0** A	**1.15** A	**3.3** A	**1.9** A	**1.1** A
HF 5B	**3.6** A	**2.1** A	**1.2** A	**3.5** A	**2.0** A	**1.2** A
HF 5A	**4.0** A	**2.3** A	**1.35** A	**3.6** A	**2.1** A	**1.2** A
HF 5BM	**5.7** A	**3.3** A	**1.9** A	**5.5** A	**3.2** A	**1.8** A
HF 5AM	**7.1** A	**4.1** A	**2.4** A	**6.5** A	**3.7** A	**2.1** A

PALLETIZATION

MODEL		GROUPAGE				CONTAINER			
		n°	H	kg		n°	H	kg	
Single-phase	Three-phase	pumps	(mm)	1~	3~	pumps	(mm)	1~	3~
HFm 50B	HF 50B	**75**	1290	630	590	**135**	2210	1110	1050
HFm 50A	HF 50A	**75**	1290	670	640	**135**	2210	1190	1140
HFm 51B	HF 51B	**70**	1430	920	850	**112**	2200	1460	1350
HFm 51A	HF 51A	**70**	1430	930	860	**112**	2200	1480	1360
HFm 60	HF 60	**36**	1470	700	690	**54**	2130	1050	1020
HFm 70B	HF 70B	**36**	1470	800	760	**54**	2130	1200	1130
–	HF 70A	**36**	1470	–	810	**54**	2130	–	1200
HFm 5C	HF 5C	**60**	1540	890	820	**84**	2100	1240	1140
HFm 5B	HF 5B	**60**	1540	890	820	**84**	2100	1240	1140
HFm 5A	HF 5A	**60**	1540	940	910	**84**	2100	1300	1270
HFm 5BM	HF 5BM	**50**	1540	990	960	**70**	2100	1380	1340
HFm 5AM	HF 5AM	**50**	1540	1120	1060	**70**	2100	1560	1480

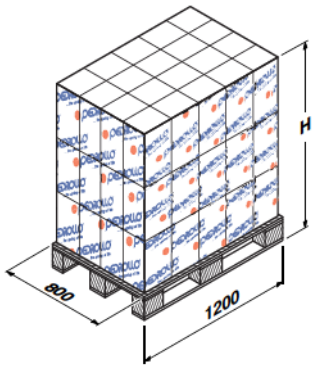

HF

Centrifugal pumps

High flow rates

PERFORMANCE RANGE

- Flow rate up to **2200 l/min** (132 m^3/h)
- Head up to **24.5 m**

APPLICATION LIMITS

- Manometric suction lift up to **7 m**
- Liquid temperature between **-10 °C** and **+90 °C**
- Ambient temperature up to **+40 °C**
- Max. working pressure:
  - **6 bar** for HF 4
  - **10 bar** for HF 6-8-20-30
- Continuous service **S1**

CONSTRUCTION AND SAFETY STANDARDS

EN 60034-1
IEC 60034-1
CEI 2-3

CERTIFICATIONS

АИЗО

УкрТЕСТ-003

INSTALLATION AND USE

Suitable for use in civil and agricultural applications. The high efficiency and continuous duty capabilities makes these pumps ideal for use in activities such as flood and spray irrigation, drawing water from lakes, rivers and wells, or for any number of different industrial applications where the characteristics of high flow rates and mid to low head are required.
The pump should be installed in an enclosed environment, or at least sheltered from inclement weather.

OPTIONALS AVAILABLE ON REQUEST

- Special mechanical seal
- Other voltages or 60 Hz frequency

GUARANTEE

2 years subject to terms and conditions

CHARACTERISTIC CURVES AND PERFORMANCE DATA

50 Hz n= 2900 1/min HS= 0 m

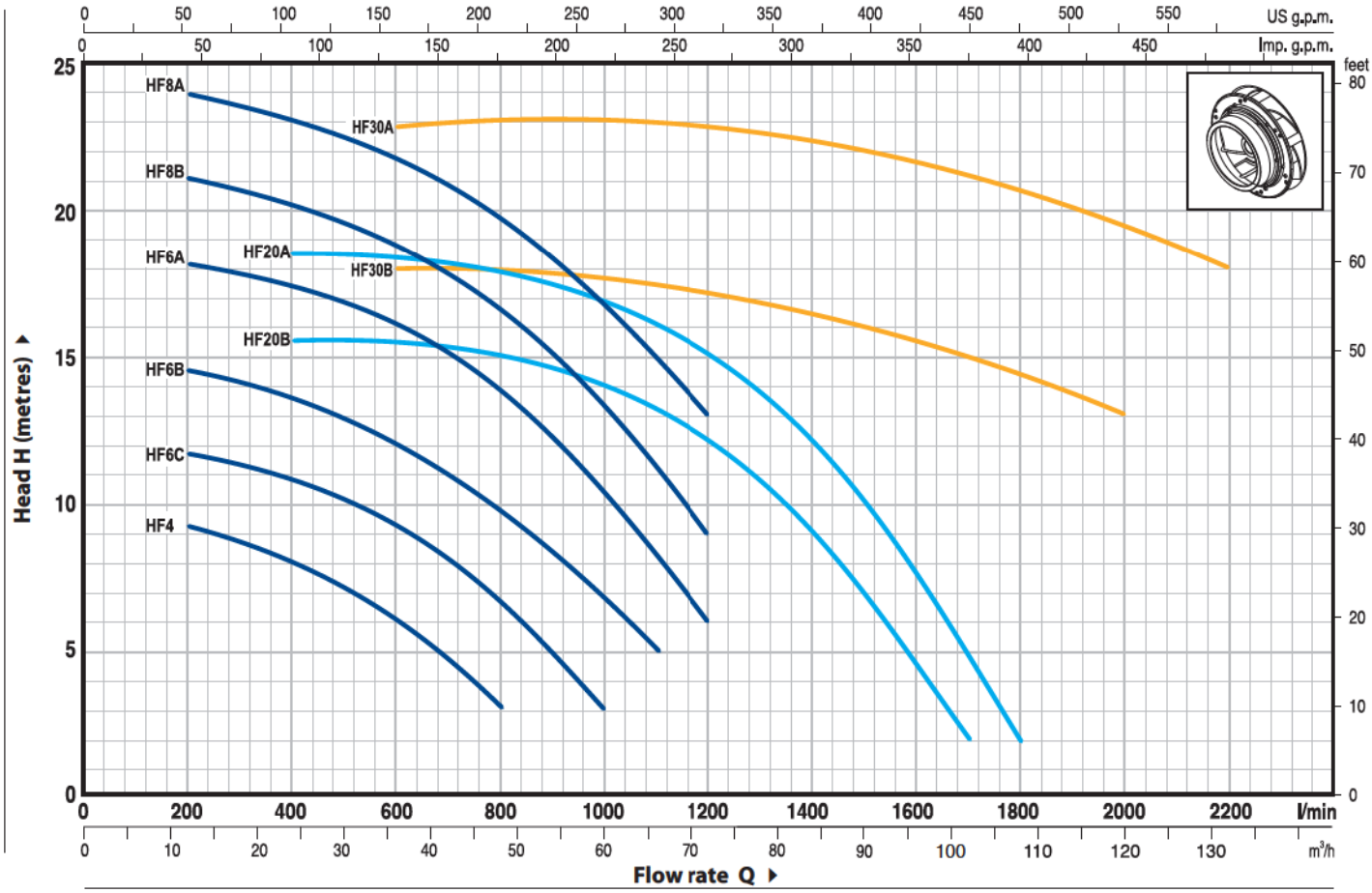

MODEL		POWER		Q m³/h	0	12	18	24	30	36	42	48	54	60	66	72	84	96	102	108	120	132
Single-phase	Three-phase	kW	HP	l/min	**0**	**200**	**300**	**400**	**500**	**600**	**700**	**800**	**900**	**1000**	**1100**	**1200**	**1400**	**1600**	**1700**	**1800**	**2000**	**2200**
HFm 4	**HF 4**	0.75	1	H metres	10	9.3	8.7	8	7	6	4.7	3										
HFm 6C	**HF 6C**	1.1	1.5		11.9	11.7	11.3	10.7	10.2	9.2	8	6.7	5	3								
HFm 6B	**HF 6B**	1.5	2		14.7	14.5	14	13.5	12.8	12	11	9.7	8.2	6.7	5							
–	**HF 6A**	2.2	3		18.5	18.1	17.8	17.2	16.8	16	15	13.8	12.2	10.5	8.3	6						
–	**HF 8B**	3	4		21.5	21	20.7	20	19.5	18.8	17.8	16.5	15	13.5	11.2	9						
–	**HF 8A**	4	5.5		24.5	24	23.5	23	22.5	21.8	20.8	19.5	18.3	16.8	15	13						
–	**HF 20B**	3	4		16	-	-	15.5	15.4	15.3	15.2	15	14.5	14	13	12	9	4.8	2			
–	**HF 20A**	4	5.5		19	-	-	18.5	18.4	18.3	18.2	18	17.5	17	16.2	15.2	12	7.8	5	2		
–	**HF 30B**	5.5	7.5		18	-	-	-	-	18	18	18	18	18	17.5	17	16.5	15.5	15	14.5	13	
–	**HF 30A**	7.5	10		23	-	-	-	-	23	23	23	23	23	22.5	22.5	22.5	22	21.5	21	19.5	18

Q = Flow rate **H** = Total manometric head **HS** = Suction height

Tolerance of characteristic curves in compliance with EN ISO 9906 App. A.

POS.	COMPONENT	CONSTRUCTION CHARACTERISTICS
1	PUMP BODY	Cast iron, complete with threaded ports in compliance with ISO 228/1
2	BODY BACKPLATE	Cast iron (stainless steel AISI 304 for HF 4)
3	IMPELLER	Brass for HF 4, HF 6, HF 8, HF 20 Cast iron for HF 30
4	MOTOR SHAFT	Stainless steel EN 10088-3 - 1.4104

5 MECHANICAL SEAL

Pump Model	*Seal Model*	*Shaft Diameter*	*Materials* Stationary ring	Rotational ring	Elastomer
HF 4	**AR-14**	**Ø 14** mm	Ceramic	Graphite	NBR
HF 6	**FN-18**	**Ø 18** mm	Graphite	Ceramic	NBR
HF 8-20	**FN-20**	**Ø 20** mm	Graphite	Ceramic	NBR
HF 30	**FN-24**	**Ø 24** mm	Graphite	Ceramic	NBR

6 BEARINGS

Pump	*Model*
HF 4	**6203 ZZ / 6203 ZZ**
HF 6	**6304 ZZ / 6204 ZZ**
HF 8B-20B	**6206 ZZ - C3 / 6205 ZZ**
HF 8A-20A	**6306 ZZ - C3 / 6206 ZZ - C3**
HF 30	**6307 ZZ - C3 / 6206 ZZ - C3**

7 CAPACITOR

Pump Single-phase	*Capacitance (230 V or 240 V)*	*(110 V)*
HFm 4	**20** µF 450 VL	**60** µF 300 VL
HFm 6C	**31.5** µF 450 VL	**60** µF 250 VL
HFm 6B	**45** µF 450 VL	**80** µF 250 VL

8 ELECTRIC MOTOR

HFm: single-phase 230 V - 50 Hz with thermal overload protector built-in to the winding.
HF: three-phase 230/400 V - 50 Hz up to 4 kW, 400/690 V - 50 Hz from 5.5 to 7.5 kW

➡ **Pumps fitted with the three-phase motor option offer IE2 (IEC 60034-30) class high performance**

– Insulation: F class.
– Protection: IP 44.

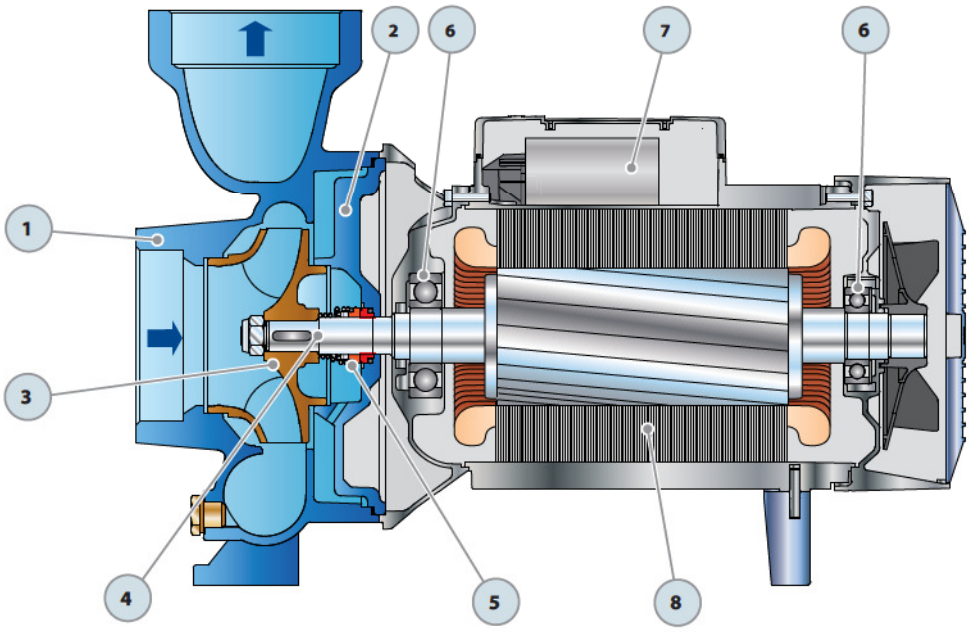

DIMENSIONS AND WEIGHT

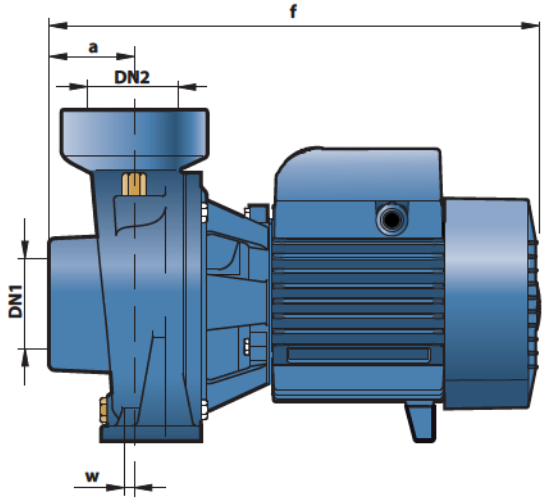

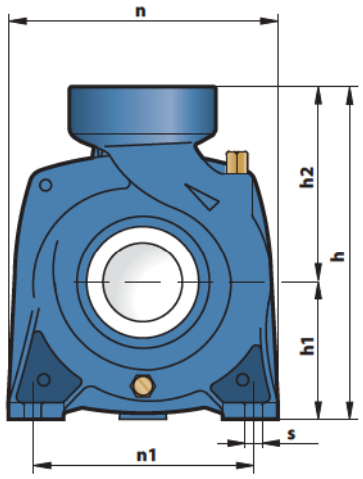

MODEL		PORTS		DIMENSIONS mm									kg	
Single-phase	Three-phase	DN1	DN2	a	f	h	h1	h2	n	n1	w	s	1~	3~
HFm 4	HF 4	2½"	2½"	55	323	240	97	143	198	155	0	10	**14.5**	**13.2**
HFm 6C	HF 6C												**25.5**	**24.2**
HFm 6B	HF 6B	3"	3"	68	411		120	192	240		6	12	**26.5**	**25.5**
–	HF 6A												–	**26.7**
–	HF 8B				435	312				190			–	**35.0**
–	HF 8A			80	465		132	180	245				–	**40.0**
–	HF 20B	4"	4"		435						30	14	–	**35.0**
–	HF 20A				465								–	**40.0**
–	HF 30B			82	585	370	160	210	292	212			–	**60.9**
–	HF 30A												–	**65.2**

ABSORPTION

MODEL	VOLTAGE (single-phase)		
Single-phase	230 V	240 V	110 V
HFm 4	**5.9** A	**5.3** A	**11.8** A
HFm 6C	**8.8** A	**8.0** A	**17.6** A
HFm 6B	**10.8** A	**9.8** A	**21.6** A

MODEL	VOLTAGE (three-phase)					
Three-phase	230 V	400 V	690 V	240 V	415 V	720 V
HF 4	**4.3** A	**2.5** A	**1.4** A	**4.0** A	**2.3** A	**1.3** A
HF 6C	**6.2** A	**3.6** A	**2.1** A	**6.0** A	**3.5** A	**2.0** A
HF 6B	**8.0** A	**4.6** A	**2.7** A	**7.4** A	**4.3** A	**2.5** A
HF 6A	**9.0** A	**5.2** A	**3.0** A	**8.3** A	**4.8** A	**2.8** A
HF 8B	**11.8** A	**6.8** A	**3.9** A	**12.1** A	**7.0** A	**4.0** A
HF 8A	**15.8** A	**9.1** A	**5.3** A	**15.2** A	**8.8** A	**5.1** A
HF 20B	**13.0** A	**7.5** A	**4.3** A	**13.4** A	**7.7** A	**4.4** A
HF 20A	**15.2** A	**8.8** A	**5.1** A	**15.3** A	**8.8** A	**5.1** A
HF 30B	**21.3** A	**12.3** A	**7.1** A	**20.4** A	**11.8** A	**6.8** A
HF 30A	**28.6** A	**16.5** A	**9.5** A	**27.5** A	**15.9** A	**9.2** A

PALLETIZATION

MODEL		GROUPAGE				CONTAINER			
		n°	H	kg		n°	H	kg	
Single-phase	Three-phase	pumps	(mm)	1~	3~	pumps	(mm)	1~	3~
HFm 4	HF 4	**60**	1540	890	830	**84**	2100	1240	1150
HFm 6C	HF 6C	**36**	1480	940	890	**54**	2150	1400	1330
HFm 6B	HF 6B	**36**	1480	970	940	**54**	2150	1450	1400
–	HF 6A	**36**	1480	–	980	**54**	2150	–	1460
–	HF 8B	**18**	1430	–	650	**24**	1860	–	860
–	HF 8A	**18**	1430	–	740	**24**	1860	–	980
–	HF 20B	**18**	1430	–	650	**24**	1860	–	860
–	HF 20A	**18**	1430	–	740	**24**	1860	–	980
–	HF 30B	**12**	1570	–	750	**16**	2040	–	990
–	HF 30A	**12**	1570	–	800	**16**	2040	–	1060

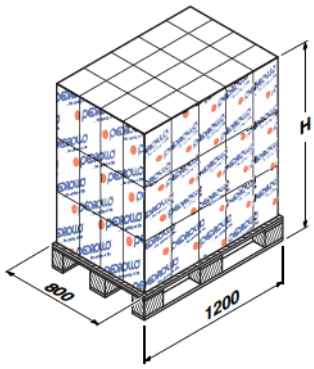

NF

Centrifugal pumps with flanged ports

PERFORMANCE RANGE

- Flow rate up to **1200 l/min** (72 m^3/h)
- Head up to **22.5 m**

APPLICATION LIMITS

- Manometric suction lift up to **7 m**
- Liquid temperature between **-10 °C** and **+90 °C**
- Ambient temperature up to **+40 °C**
- Max. working pressure: **10 bar**
- Continuous service **S1**

CONSTRUCTION AND SAFETY STANDARDS

EN 60034-1
IEC 60034-1
CEI 2-3

CERTIFICATIONS

АИЗО

УкрТЕСТ-003

INSTALLATION AND USE

The performance and mechanical dimensions of the NF series pumps have been specifically designed for use in the civil and agricultural sectors. As a result of their high efficiency and continuous duty capabilities, they are recommended for use in applications such as flood and spray irrigation, drawing water from lakes, rivers and wells, and for generally transferring liquids.
The pump should be installed in an enclosed environment, or at least sheltered from inclement weather.

OPTIONALS AVAILABLE ON REQUEST

- Special mechanical seal
- Other voltages or 60 Hz frequency

GUARANTEE

2 years subject to terms and conditions

CHARACTERISTIC CURVES AND PERFORMANCE DATA

50 Hz n= 2900 1/min HS= 0 m

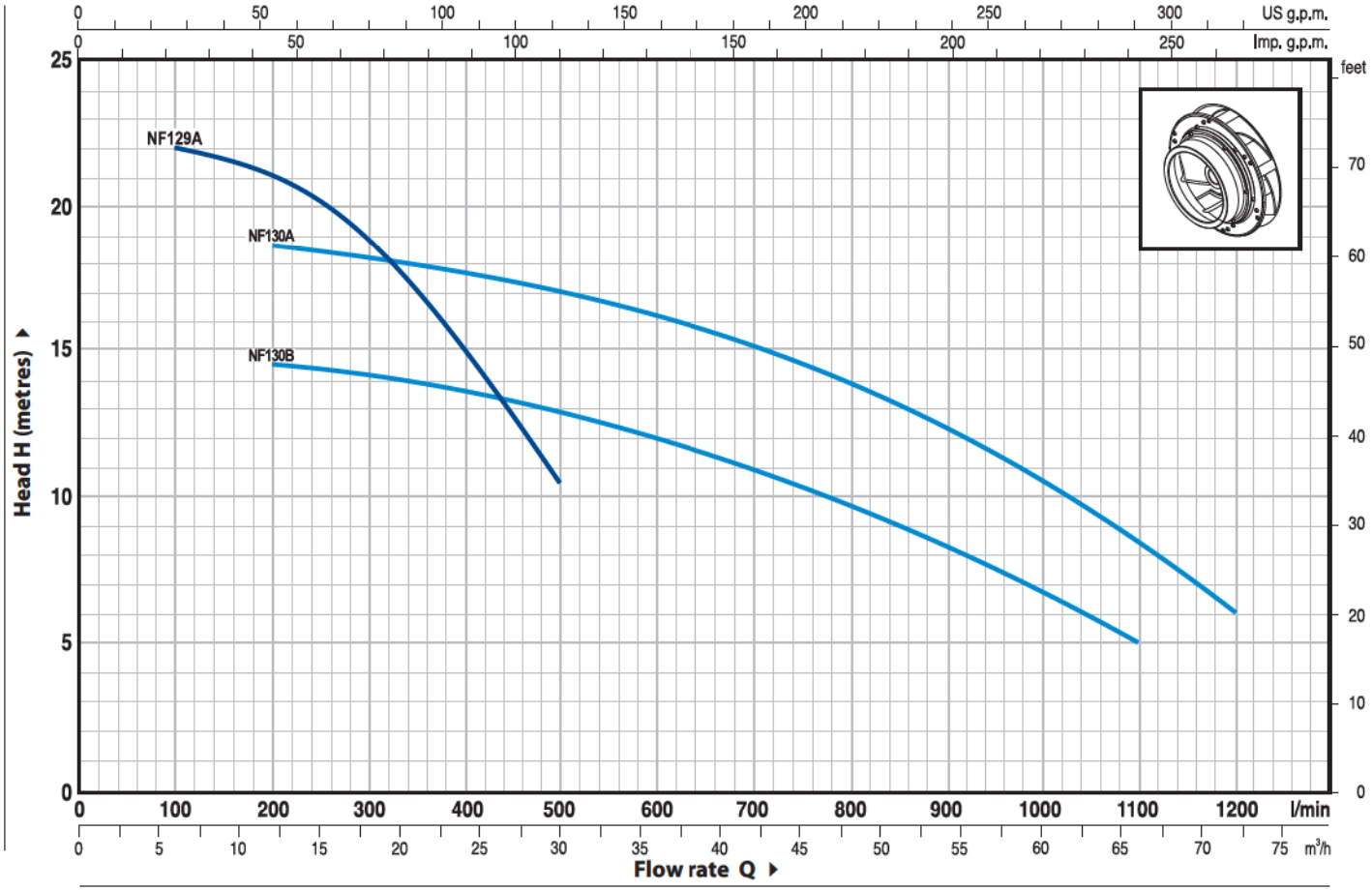

MODEL		POWER		Q m³/h	0	6	9	12	15	18	21	24	30	36	42	48	54	60	66	72
Single-phase	Three-phase	kW	HP	Q l/min	**0**	**100**	**150**	**200**	**250**	**300**	**350**	**400**	**500**	**600**	**700**	**800**	**900**	**1000**	**1100**	**1200**
NFm 129A	**NF 129A**	1.5	2		22.5	22	21.5	21	20	18.5	16.6	14.5	10							
NFm 130B	**NF 130B**	1.5	2	**H** metres	14.7	–	–	14.5	14.2	14	13.7	13.5	13.2	12	11	9.7	8.2	6.7	5	
–	**NF 130A**	2.2	3		18.5	–	–	18.1	18	17.8	17.5	17.2	16.8	16	15	13.8	12.2	10.5	8.3	6

Q = Flow rate **H** = Total manometric head **HS** = Suction height

Tolerance of characteristic curves in compliance with EN ISO 9906 App. A.

POS.	COMPONENT	CONSTRUCTION CHARACTERISTICS
1	**PUMP BODY**	Cast iron, complete with flanged suction and delivery ports in compliance with ISO 228/1
2	**BODY BACKPLATE**	Cast iron
3	**IMPELLER**	Brass
4	**MOTOR SHAFT**	Stainless steel EN 10088-3 - 1.4104

5 MECHANICAL SEAL

Seal	*Shaft*	*Materials*		
Model	***Diameter***	*Stationary ring*	*Rotational ring*	*Elastomer*
FN-18	**Ø 18** mm	Graphite	Ceramic	NBR

6 BEARINGS

Pump	*Model*
NF 129	**6204 ZZ / 6204 ZZ**
NF 130	**6304 ZZ / 6204 ZZ**

7 CAPACITOR

Capacitance	
(230 V or 240 V)	***(110 V)***
45 µF 450 VL	**80** µF 250 VL

8 ELECTRIC MOTOR

NFm: single-phase 230 V - 50 Hz with thermal overload protector built-in to the winding.
NF: three-phase 230/400 V - 50 Hz.

➡ **Pumps fitted with the three-phase motor option offer IE2 (IEC 60034-30) class high performance**

– Insulation: F class.
– Protection: IP 44.

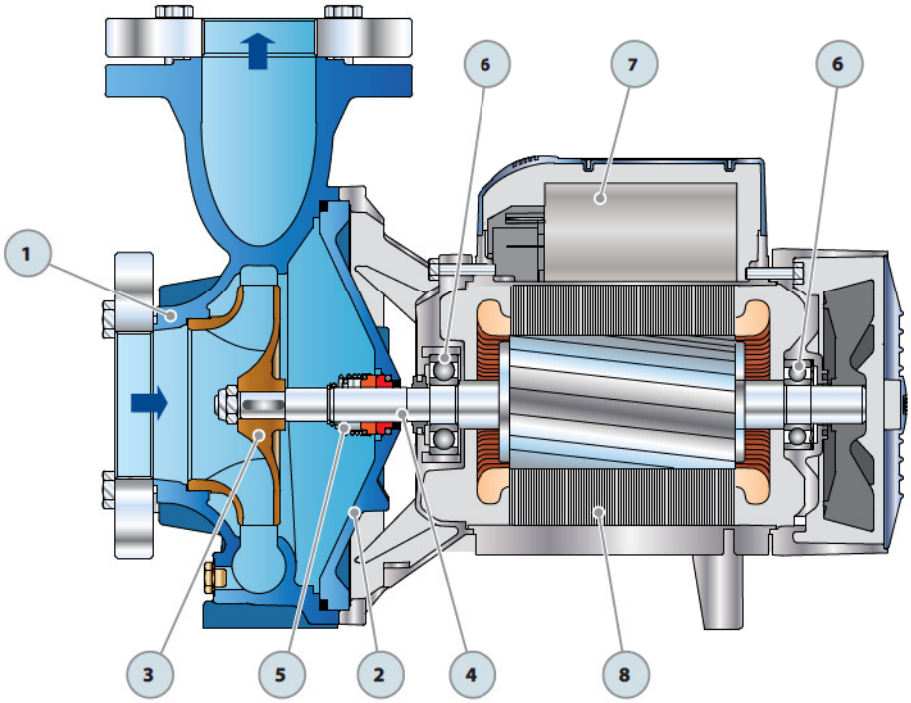

DIMENSIONS AND WEIGHT

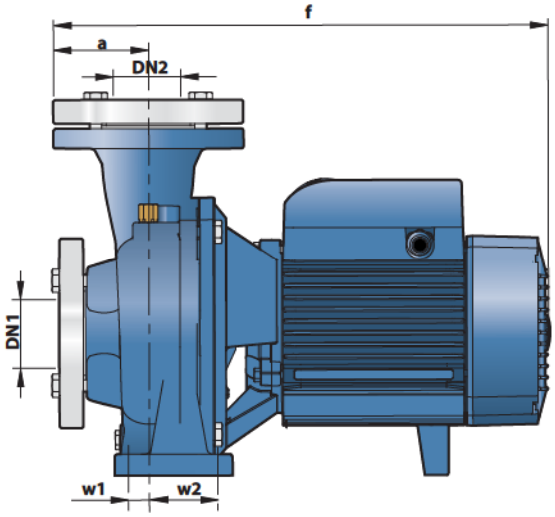

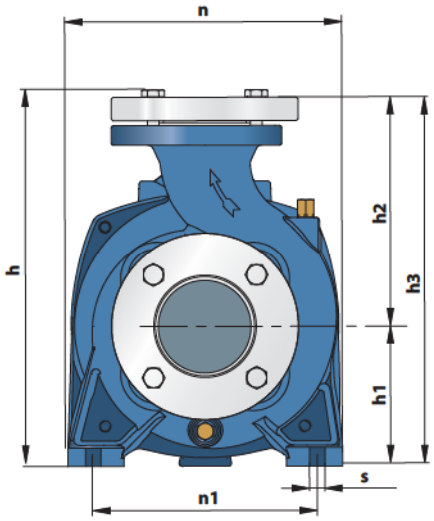

MODEL		PORTS		DIMENSIONS mm											kg*	
Single-phase	Three-phase	DN1	DN2	a	f	h	h1	h2	h3	n	n1	w1	w2	s	1~	3~
NFm 129A	NF 129A	2"	2"	56	398	276	110	159	269	206	160	1	62	11	**25.0**	**23.7**
NFm 130B	NF 130B	3"	3"	71	420	320	120	193	313	240	190	6	66	12	**31.6**	**30.7**
–	NF 130A														–	**32.6**

(*weight includes counterflanges)

ABSORPTION

MODEL	VOLTAGE (single-phase)		
Single-phase	230 V	240 V	110 V
NFm 129A	**9.8** A	**9.0** A	**19.6** A
NFm 130B	**10.8** A	**9.8** A	**21.6** A

MODEL	VOLTAGE (three-phase)					
Three-phase	230 V	400 V	690 V	240 V	415 V	720 V
NF 129A	**7.1** A	**4.1** A	**2.4** A	**6.5** A	**3.7** A	**2.1** A
NF 130B	**8.0** A	**4.6** A	**2.7** A	**7.4** A	**4.3** A	**2.5** A
NF 130A	**9.0** A	**5.2** A	**3.0** A	**8.3** A	**4.8** A	**2.8** A

PALLETIZATION

MODEL		GROUPAGE				CONTAINER			
		n°	H	kg		n°	H	kg	
Single-phase	Three-phase	pumps	(mm)	1~	3~	pumps	(mm)	1~	3~
NFm 129A	NF 129A	**36**	1430	910	870	**54**	2080	1360	1300
NFm 130B	NF 130B	**36**	1430	1160	1130	**54**	2080	1730	1680
–	NF 130A	**36**	1430	–	1170	**54**	2080	–	1750

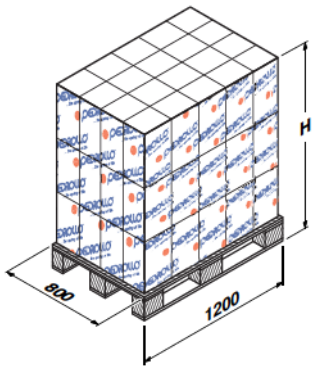

NGA

Centrifugal pumps with open impeller

PERFORMANCE RANGE

- Flow rate up to **350 l/min** (21 m^3/h)
- Head up to **20 m**

APPLICATION LIMITS

- Manometric suction lift up to **7 m**
- Liquid temperature between **-10 °C** and **+90 °C**
  (up to +40 for the version with the technopolymer impeller)
- Ambient temperature between **-10 °C** and **+40 °C**
- Max. working pressure **6 bar**
- Passage of suspended solids up to **Ø 10 mm**
- Continuous service **S1**

CONSTRUCTION AND SAFETY STANDARDS

EN 60034-1
IEC 60034-1
CEI 2-3

CERTIFICATIONS

АИЗО

УкрТЕСТ-003

INSTALLATION AND USE

Suitable for use with liquids that are not chemically aggressive towards the materials from which the pump is made.
The open impeller design allows **liquids containing relatively high levels of impurities** to be pumped without the risk of the impeller clogging. As a result of these characteristics the NGA series pumps are used specifically in industry and for transferring water from canals, rivers, reservoirs, tanks, etc.
The pump should be installed in an enclosed environment, or at least sheltered from inclement weather.

OPTIONALS AVAILABLE ON REQUEST

- Pump with technopolymer impeller
- Special mechanical seal
- Other voltages or 60 Hz frequency

GUARANTEE

2 years subject to terms and conditions

CHARACTERISTIC CURVES AND PERFORMANCE DATA

50 Hz n= 2900 1/min HS= 0 m

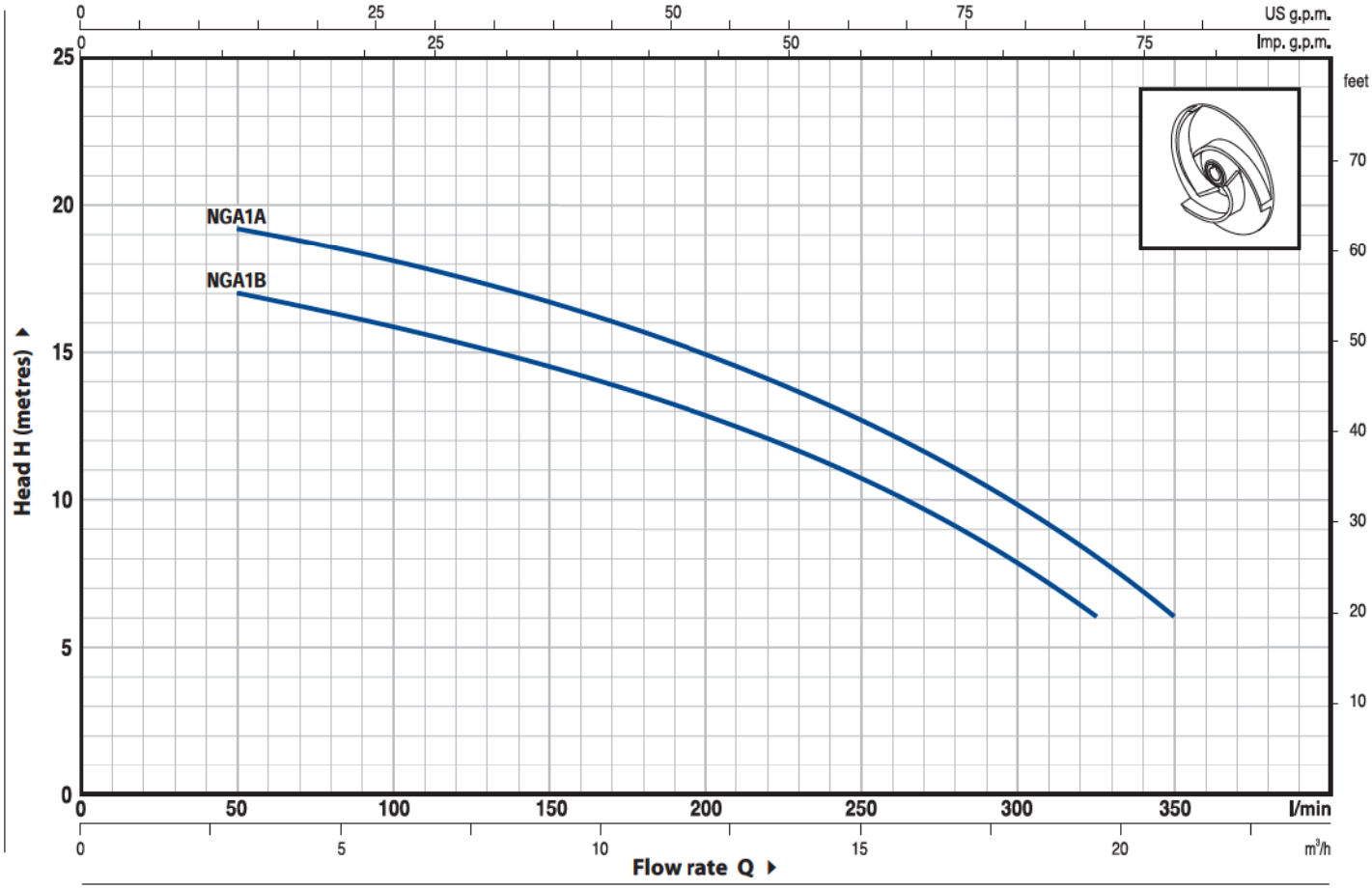

MODEL		POWER		Q									
Single-phase	Three-phase	kW	HP	m³/h	0	3	6	9	12	15	18	19.5	21
				l/min	**0**	**50**	**100**	**150**	**200**	**250**	**300**	**325**	**350**
NGAm 1B	**NGA 1B**	0.55	0.75	H metres	18	17	16	14.5	13	10.5	8	6	
NGAm 1A	**NGA 1A**	0.75	1		20	19.5	18	16.5	15	12.5	10	8	6

Q = Flow rate **H** = Total manometric head **HS** = Suction height

Tolerance of characteristic curves in compliance with EN ISO 9906 App. A.

POS.	COMPONENT	CONSTRUCTION CHARACTERISTICS
1	**PUMP BODY**	Cast iron, complete with threaded ports in compliance with ISO 228/1
2	**BODY BACKPLATE**	Stainless steel AISI 304
3	**IMPELLER**	Open impeller in stainless steel 316
4	**MOTOR SHAFT**	Stainless steel EN 10088-3 - 1.4104

5 MECHANICAL SEAL

Seal	*Shaft*	*Materials*		
Model	***Diameter***	*Stationary ring*	*Rotational ring*	*Elastomer*
AR-14	**Ø 14** mm	Ceramic	Graphite	NBR

6 BEARINGS **6203 ZZ / 6203 ZZ**

7 CAPACITOR

Pump	*Capacitance*	
Single-phase	***(230 V or 240 V)***	***(110 V)***
NGAm 1B	**16** µF 450 VL	**60** µF 300 VL
NGAm 1A	**20** µF 450 VL	**60** µF 300 VL

8 ELECTRIC MOTOR

NGAm: single-phase 230 V - 50 Hz with thermal overload protector built-in to the winding.
NGA: three-phase 230/400 V - 50 Hz.

➠ **Pumps fitted with the three-phase motor option offer IE2 (IEC 60034-30) class high performance**

– Insulation: F class.
– Protection: IP 44.

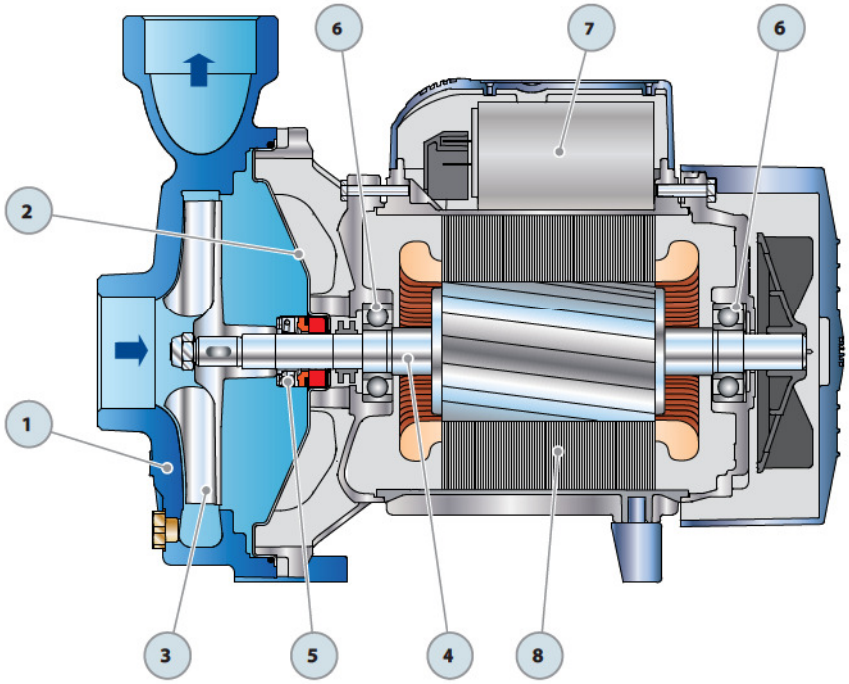

DIMENSIONS AND WEIGHT

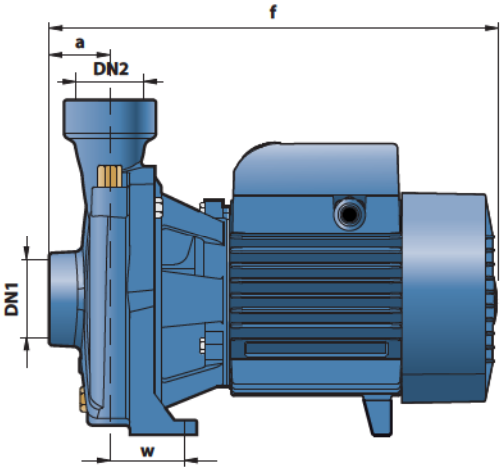

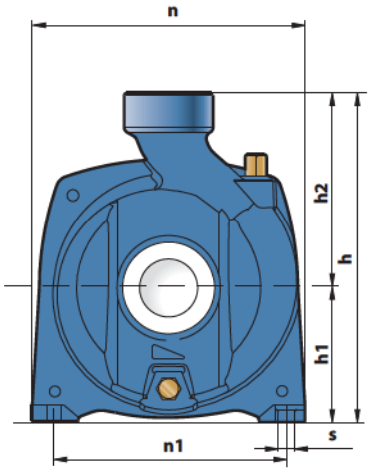

MODEL		PORTS		DIMENSIONS mm									kg	
Single-phase	Three-phase	DN1	DN2	a	f	h	h1	h2	n	n1	w	s	1~	3~
NGAm 1B	NGA 1B	1½"	1½"	41	297	227	92	135	190	160	50	10	**12.7**	**11.8**
NGAm 1A	NGA 1A												**12.8**	**11.9**

ABSORPTION

MODEL	VOLTAGE (single-phase)		
Single-phase	230 V	240 V	110 V
NGAm 1B	**5.6** A	**5.3** A	**11.2** A
NGAm 1A	**6.2** A	**6.0** A	**12.0** A

MODEL	VOLTAGE (three-phase)					
Three-phase	230 V	400 V	690 V	240 V	415 V	720 V
NGA 1B	**3.3** A	**1.9** A	**1.1** A	**3.2** A	**1.85** A	**1.1** A
NGA 1A	**3.7** A	**2.1** A	**1.2** A	**3.7** A	**2.1** A	**1.2** A

PALLETIZATION

MODEL		GROUPAGE				CONTAINER			
		n°	H	kg		n°	H	kg	
Single-phase	Three-phase	pumps	(mm)	1~	3~	pumps	(mm)	1~	3~
NGAm 1B	NGA 1B	**70**	1415	910	840	**112**	2180	1440	1340
NGAm 1A	NGA 1A	**70**	1415	920	850	**112**	2180	1450	1350

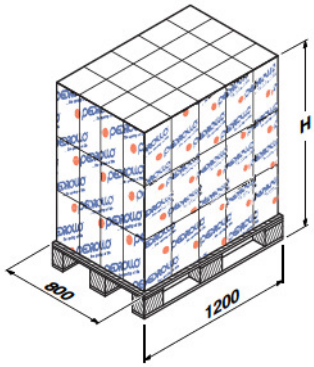

PRO-NGA

Stainless steel pump with open impeller

PERFORMANCE RANGE

- Flow rate up to **350 l/min** (21 m^3/h)
- Head up to **20 m**

APPLICATION LIMITS

- Manometric suction lift up to **7 m**
- Liquid temperature between **-10 °C** and **+90 °C**
- Ambient temperature between **-10 °C** and **+40 °C**
- Max. working pressure **6 bar**
- Passage of suspended solids up to **Ø 10 mm**
- Continuous service **S1**

CONSTRUCTION AND SAFETY STANDARDS

EN 60034-1
IEC 60034-1
CEI 2-3

CERTIFICATIONS

АИЗО

УкрТЕСТ-003

INSTALLATION AND USE

Suitable for use with clean water and liquids that are not chemically aggressive towards the materials from which the pump is made. The open impeller design allows **liquids containing relatively high levels of impurities** to be pumped without the risk of the impeller clogging. All of the components in contact with the pumped liquid are constructed in stainless steel AISI 316. As a result of these characteristics the PRO-NGA series pumps find specific use in assemblies for washing fruit, vegetables, fish and shellfish, in industrial assemblies for washing metallic objects and glass containers, as well as for the circulation of cooling liquids.
The pump should be installed in an enclosed environment, or at least sheltered from inclement weather.

OPTIONALS AVAILABLE ON REQUEST

- Special mechanical seal
- Other voltages or 60 Hz frequency

GUARANTEE

2 years subject to terms and conditions

CHARACTERISTIC CURVES AND PERFORMANCE DATA

50 Hz n= 2900 1/min HS= 0 m

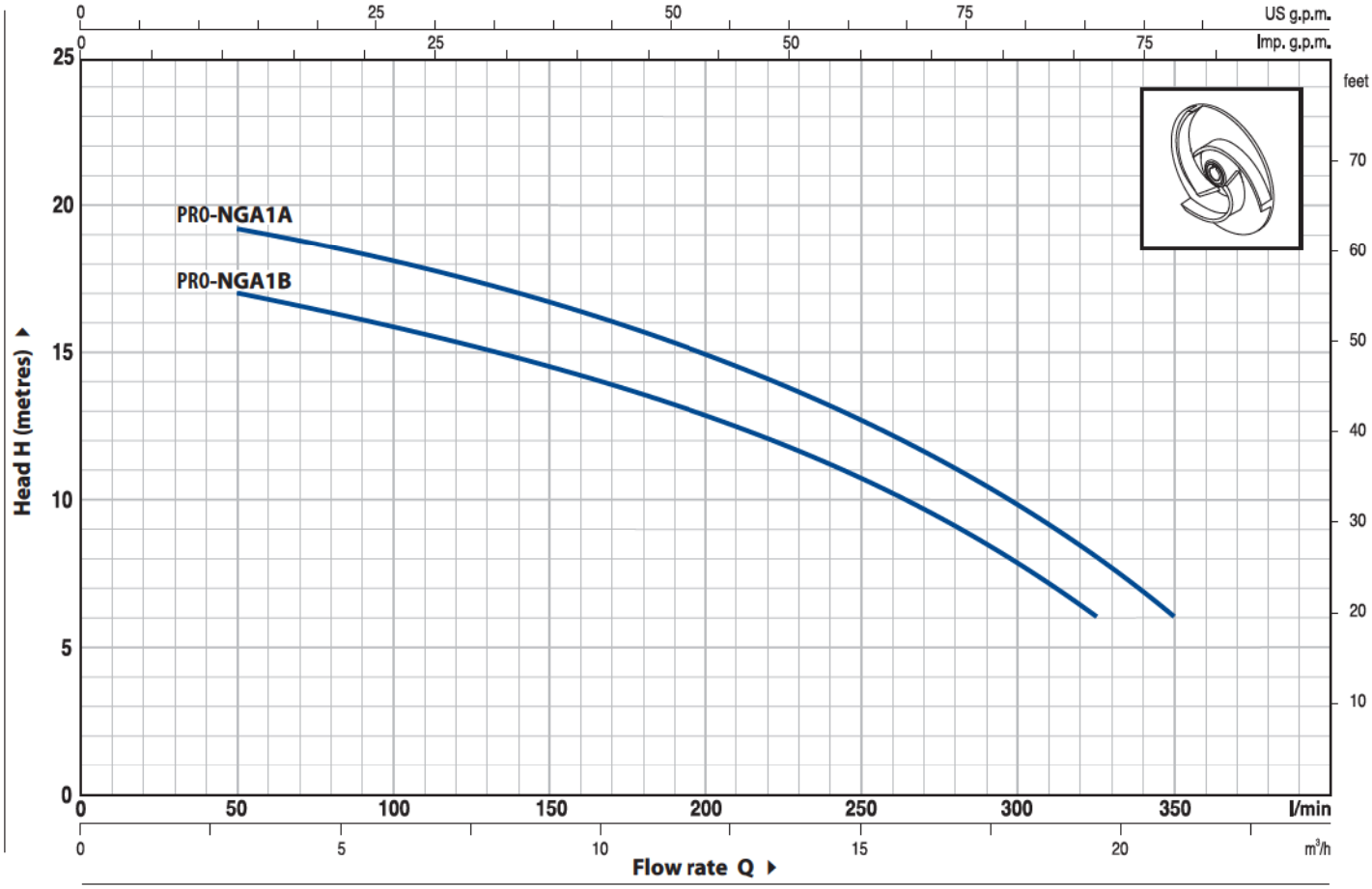

MODEL		POWER		Q									
Single-phase	Three-phase	kW	HP		m³/h	0	3	6	9	12	15	18	19.5	21
					l/min	**0**	**50**	**100**	**150**	**200**	**250**	**300**	**325**	**350**
PR0-NGAm 1B	**PR0-NGA 1B**	0.55	0.75	**H**	metres	18	17	16	14.5	13	10.5	8	6	
PR0-NGAm 1A	**PR0-NGA 1A**	0.75	1			20	19.5	18	16.5	15	12.5	10	8	6

Q = Flow rate **H** = Total manometric head **HS** = Suction height

Tolerance of characteristic curves in compliance with EN ISO 9906 App. A.

PRO-NGA

POS.	COMPONENT	CONSTRUCTION CHARACTERISTICS
1	PUMP BODY	Stainless steel AISI 316, complete with threaded ports in compliance with ISO 228/1
2	BODY BACKPLATE	Stainless steel AISI 316
3	IMPELLER	Open impeller in stainless steel 316
4	MOTOR SHAFT	Stainless steel AISI 316

5 MECHANICAL SEAL

Seal	*Shaft*	*Materials*		
Model	*Diameter*	*Stationary ring*	*Rotational ring*	*Elastomer*
AR-14S	**Ø 14** mm	Ceramic	Graphite	Viton

6 BEARINGS **6203 ZZ / 6203 ZZ**

7 CAPACITOR

Pump	*Capacitance*	
Single-phase	*(230 V or 240 V)*	*(110 V)*
PRO-NGAm 1B	**16** µF 450 VL	**60** µF 300 VL
PRO-NGAm 1A	**20** µF 450 VL	**60** µF 300 VL

8 ELECTRIC MOTOR

PRO-NGAm: single-phase 230 V - 50 Hz with thermal overload protector built-in to the winding.
PRO-NGA: three-phase 230/400 V - 50 Hz.

➡ **Pumps fitted with the three-phase motor option offer IE2 (IEC 60034-30) class high performance**

– Insulation: F class.
– Protection: IP 44.

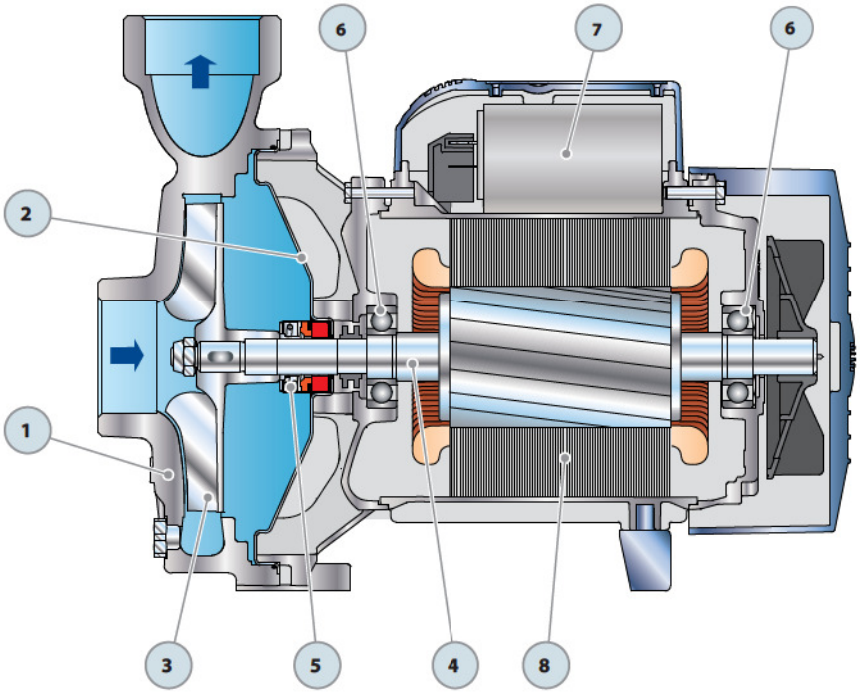

DIMENSIONS AND WEIGHT

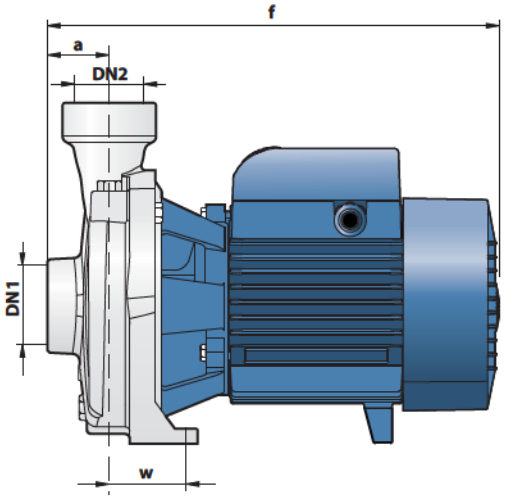

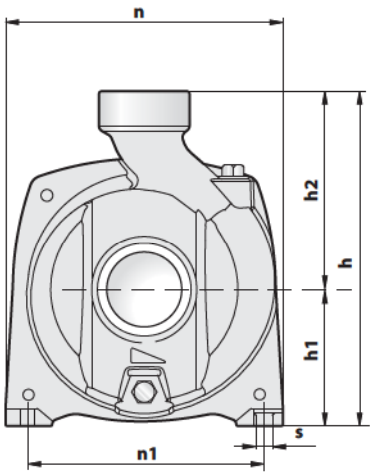

MODEL		PORTS		DIMENSIONS mm									kg	
Single-phase	Three-phase	DN1	DN2	a	f	h	h1	h2	n	n1	w	s	1~	3~
PR0-NGAm 1B	PR0-NGA 1B	1½"	1½"	41	297	227	92	135	190	160	50	10	**13.0**	**11.9**
PR0-NGAm 1A	PR0-NGA 1A												**13.1**	**12.0**

ABSORPTION

MODEL	VOLTAGE (single-phase)		
Single-phase	230 V	240 V	110 V
PR0-NGAm 1B	**5.6** A	**5.3** A	**11.2** A
PR0-NGAm 1A	**6.2** A	**6.0** A	**12.0** A

MODEL	VOLTAGE (three-phase)					
Three-phase	230 V	400 V	690 V	240 V	415 V	720 V
PR0-NGA 1B	**3.3** A	**1.9** A	**1.1** A	**3.2** A	**1.85** A	**1.1** A
PR0-NGA 1A	**3.6** A	**2.1** A	**1.2** A	**3.5** A	**2.0** A	**1.2** A

PALLETIZATION

MODEL		GROUPAGE				CONTAINER			
		n°	H	kg		n°	H	kg	
Single-phase	Three-phase	pumps	(mm)	1~	3~	pumps	(mm)	1~	3~
PR0-NGAm 1B	PR0-NGA 1B	**70**	1415	930	850	**112**	2180	1480	1350
PR0-NGAm 1A	PR0-NGA 1A	**70**	1415	940	860	**112**	2180	1490	1360

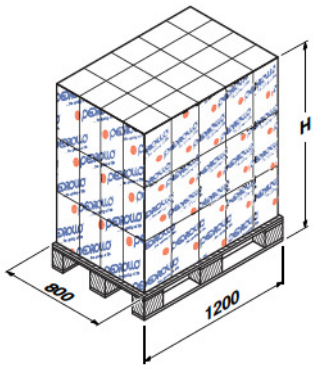

2CP

Twin-impeller pumps

PERFORMANCE RANGE

- Flow rate up to **450 l/min** (27 m^3/h)
- Head up to **112 m**

APPLICATION LIMITS

- Manometric suction lift up to **7 m**
- Liquid temperature between **-10 °C** and **+90 °C**
  (up to +40 for the version with the technopolymer impeller)
- Ambient temperature between **-10 °C** and **+40 °C**
- Max. working pressure **10 bar**
  (**6 bar** for 2CP25/130N)
- Continuous service **S1**

CONSTRUCTION AND SAFETY STANDARDS

EN 60034-1
IEC 60034-1
CEI 2-3

CERTIFICATIONS

АИЗО

УкрТЕСТ - 003

INSTALLATION AND USE

Suitable for use with clean water and liquids that are not chemically aggressive towards the materials from which the pump is made. The high efficiency and adaptability of these pumps to even the most unusual of applications, makes them ideal for use in the domestic, civil and industrial sectors; in particular for the distribution of water in combination with pressure sets, for pressure boosting and in fire-fighting sets.
The pump should be installed in an enclosed environment, or at least sheltered from inclement weather.

OPTIONALS AVAILABLE ON REQUEST

- Pumps with technopolymer impeller
- Special mechanical seal
- Other voltages or 60 Hz frequency
- IP55 class protection for:
  – 2CP32/200, – 2CP40/180,
  – 2CP32/210, – 2CP40/200

GUARANTEE

2 years subject to terms and conditions

PERFORMANCE RANGE **50 Hz** **n= 2900 1/min** HS= 0 m

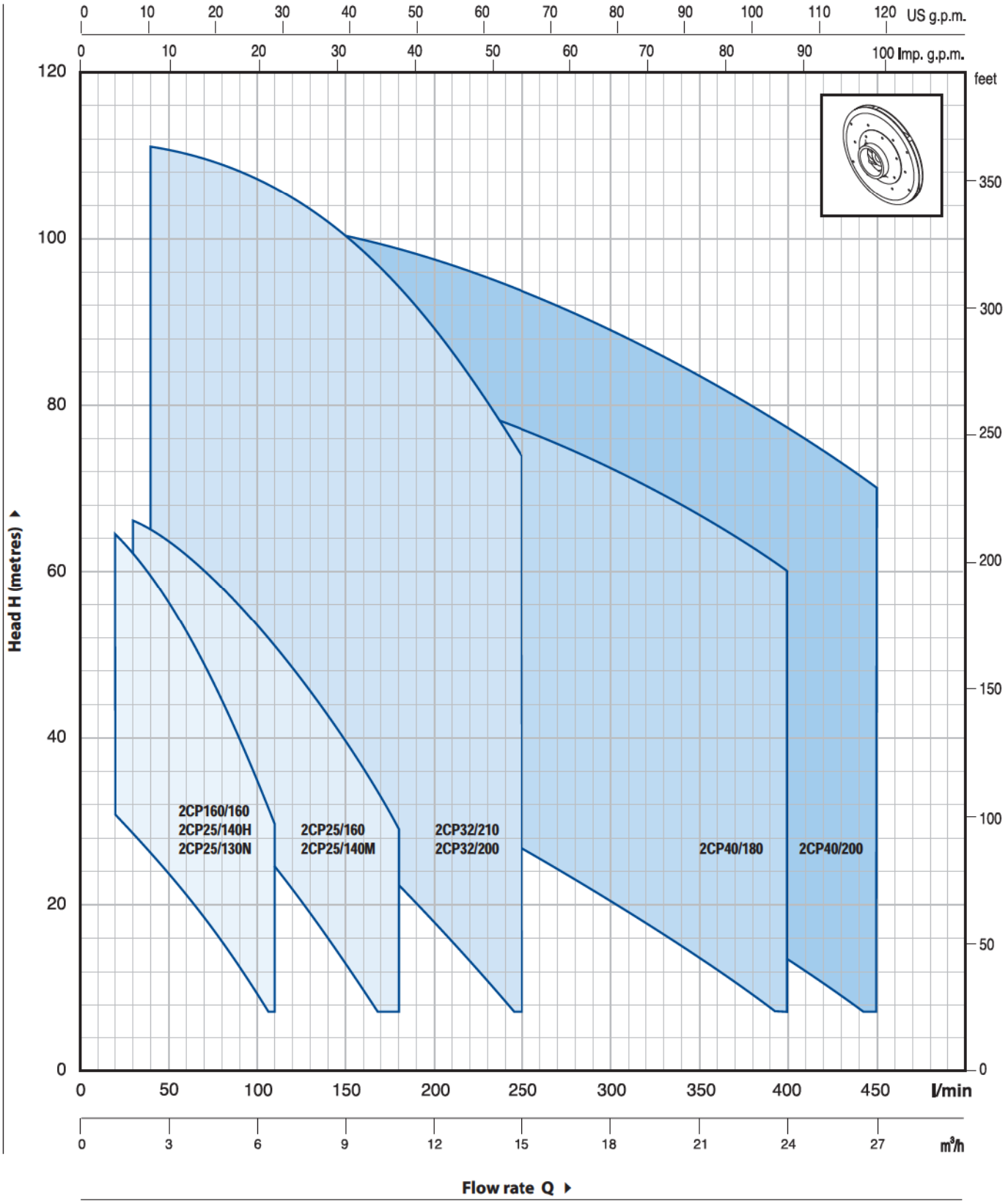

CHARACTERISTIC CURVES AND PERFORMANCE DATA

50 Hz n= 2900 1/min HS= 0 m

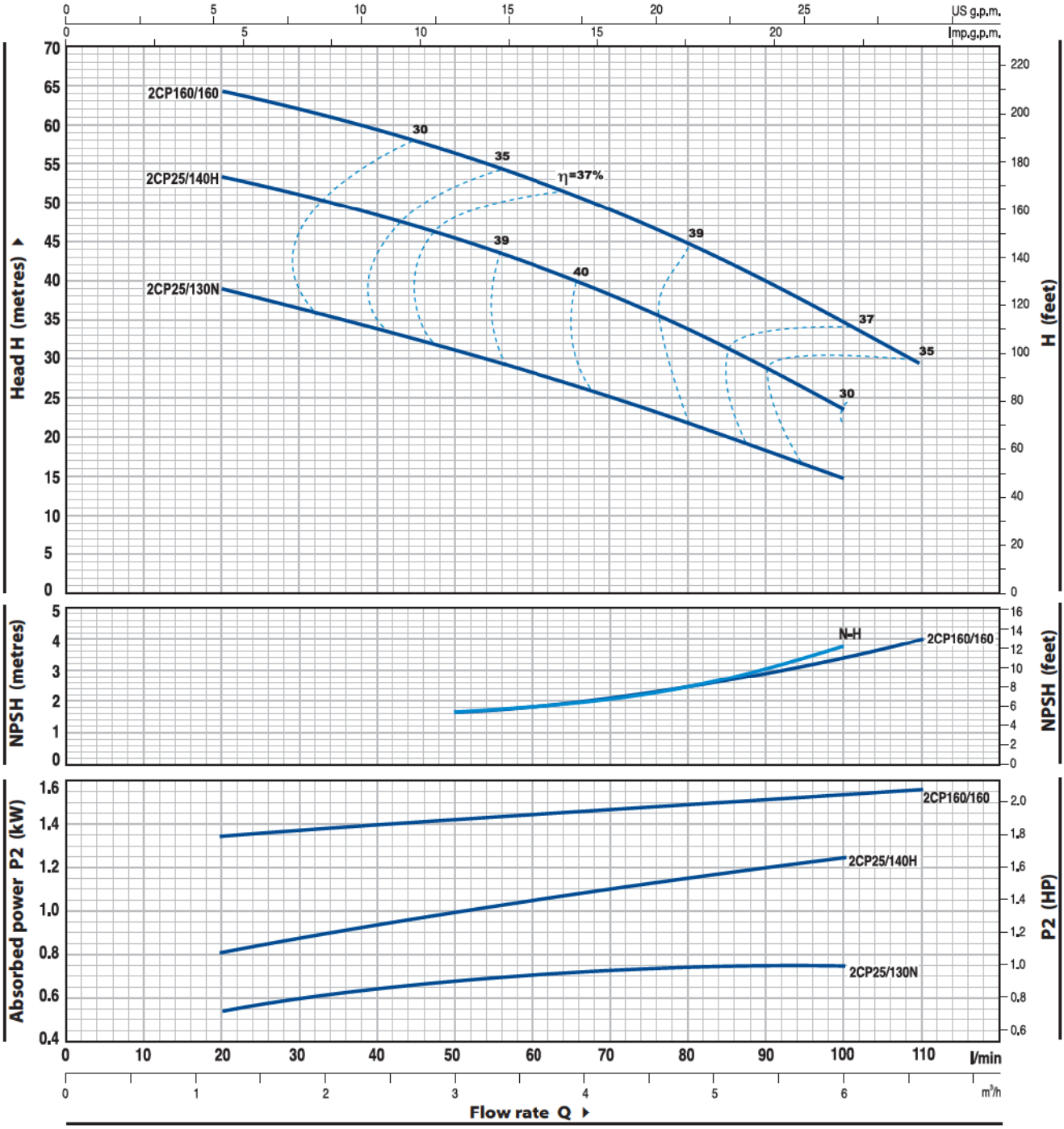

MODEL		POWER		Q m³/h	0	1.2	1.8	2.4	3.0	3.6	4.2	4.8	5.4	6.0	6.6
Single-phase	Three-phase	kW	HP	l/min	**0**	**20**	**30**	**40**	**50**	**60**	**70**	**80**	**90**	**100**	**110**
2CPm 25/130N	**2CP 25/130N**	0.75	1		42	39	37	34	31	28.5	25.5	22	18	15	
2CPm 25/140H	**2CP 25/140H**	1.1	1.5	**H** metres	54	53	51	49	46	42	38	34	29	24	
2CPm 160/160	**2CP 160/160**	1.5	2		66	64	62	60	57	53	49	44	39.5	35	30

Q = Flow rate **H** = Total manometric head **HS** = Suction height

Tolerance of characteristic curves in compliance with EN ISO 9906 App. A.

CHARACTERISTIC CURVES AND PERFORMANCE DATA

50 Hz n= 2900 1/min HS= 0 m

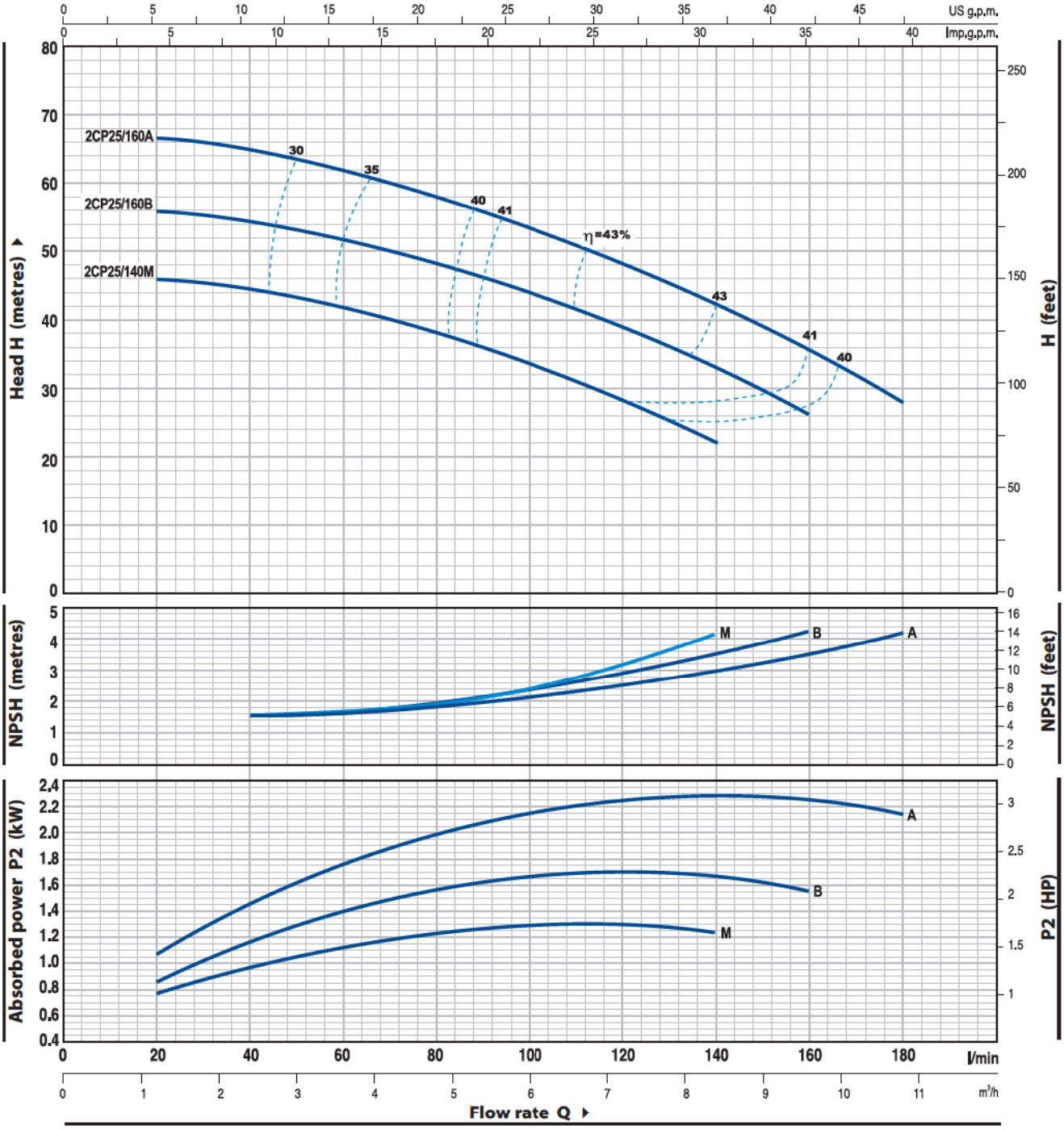

MODEL		POWER		Q m³/h	0	1.2	1.8	2.4	3.0	3.6	4.2	4.8	5.4	6.0	6.6	7.5	8.4	9.6	10.8
Single-phase	Three-phase	kW	HP	l/min	**0**	**20**	**30**	**40**	**50**	**60**	**70**	**80**	**90**	**100**	**110**	**125**	**140**	**160**	**180**
2CPm 25/140M	**2CP 25/140M**	1.1	1.5		47	46	45.5	44	43	42	41	38	36	34	31	27	22		
2CPm 25/160B	**2CP 25/160B**	1.5	2	**H** metres	58	56	55	54	53	52	50	48	46	44	41	37	33	26	
–	**2CP 25/160A**	2.2	3		68	66.5	65.5	65	63	62	60	58	56	54	51	47	42	35	28

Q = Flow rate **H** = Total manometric head **HS** = Suction height

Tolerance of characteristic curves in compliance with EN ISO 9906 App. A.

CHARACTERISTIC CURVES AND PERFORMANCE DATA

50 Hz n= 2900 1/min HS= 0 m

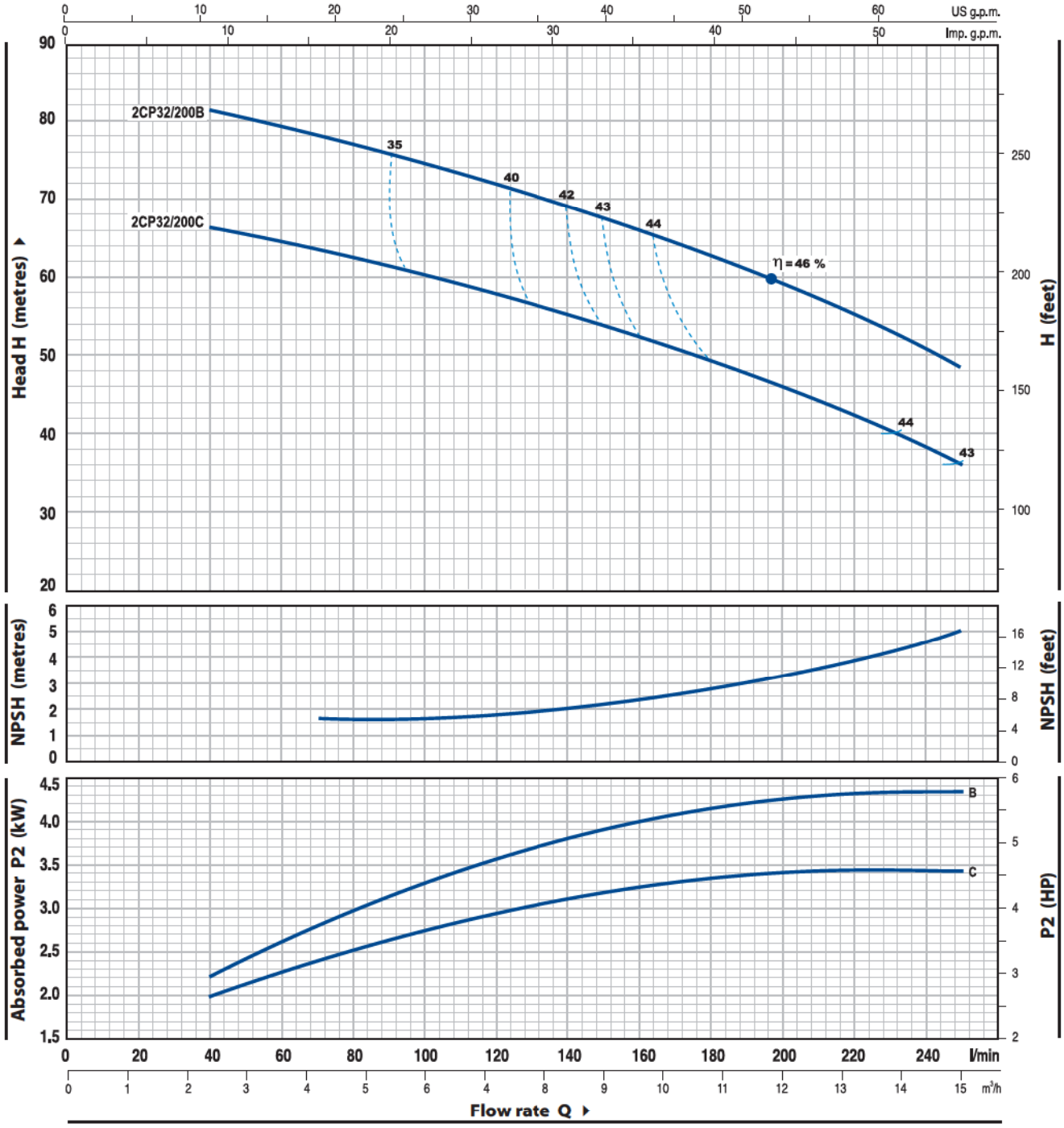

MODEL	POWER		Q m³/h	0	2.4	3.0	3.6	4.2	4.8	5.4	6.0	6.6	7.5	8.4	9.6	10.8	12.0	15.0
Three-phase	kW	HP	l/min	**0**	**40**	**50**	**60**	**70**	**80**	**90**	**100**	**110**	**125**	**140**	**160**	**180**	**200**	**250**
2CP 32/200C	3	4	H metres	70	66.5	65.5	65	64	63	62	60.5	59	57	55	52	49.5	46.5	36
2CP 32/200B	4	5.5		85	81	80	79	78	77	76	75	74	72	69	66	62	58	49

Q = Flow rate **H** = Total manometric head **HS** = Suction height

Tolerance of characteristic curves in compliance with EN ISO 9906 App. A.

CHARACTERISTIC CURVES AND PERFORMANCE DATA

50 Hz n= 2900 1/min HS= 0 m

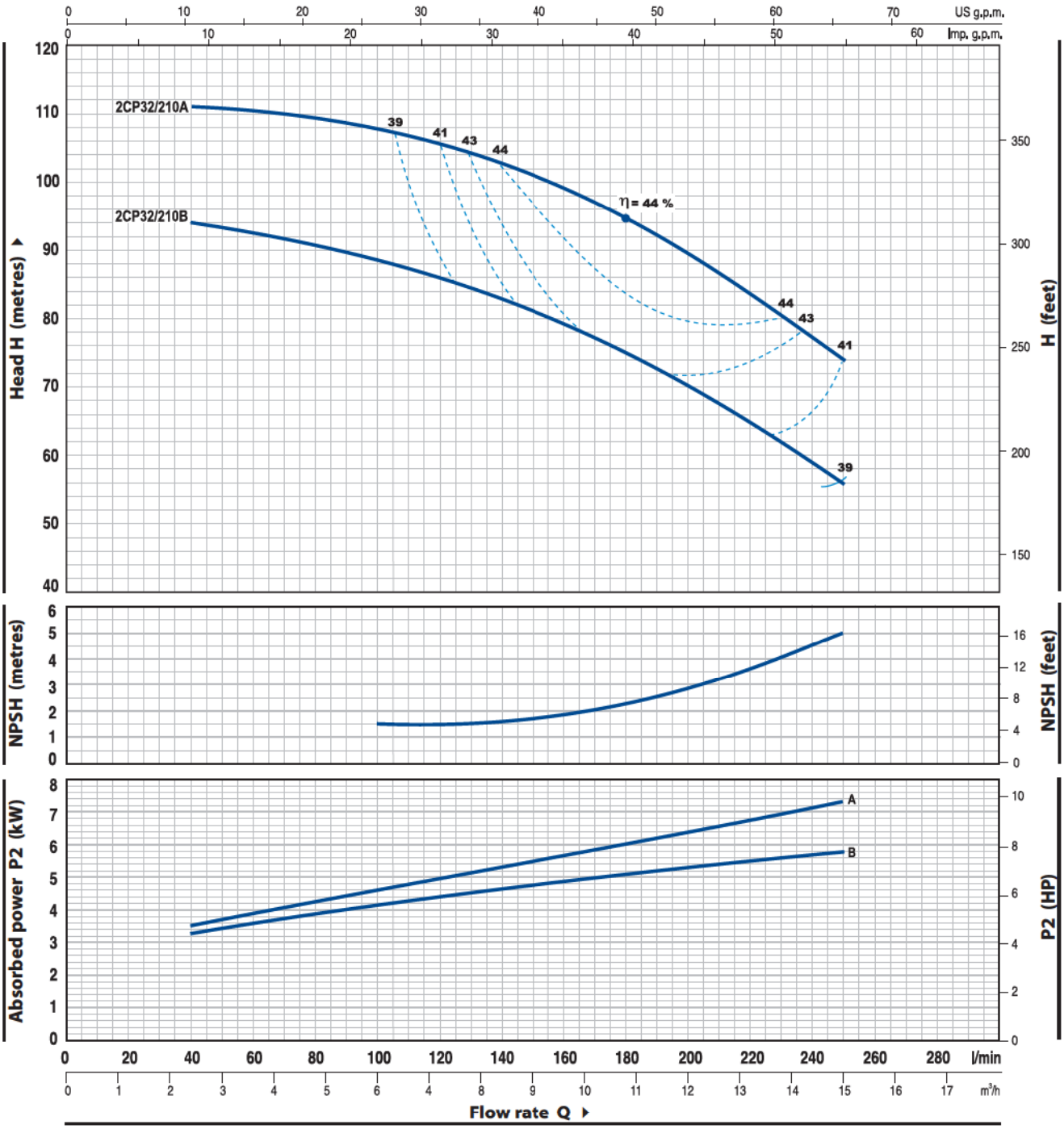

MODEL	POWER		Q m³/h	0	2.4	3.0	3.6	4.2	4.8	5.4	6.0	6.6	7.5	8.4	9.6	10.8	12.0	15.0
Three-phase	kW	HP	Q l/min	**0**	**40**	**50**	**60**	**70**	**80**	**90**	**100**	**110**	**125**	**140**	**160**	**180**	**200**	**250**
2CP 32/210B	5.5	7.5	H metres	94	94	93.5	93	92	91	90	89	87	85	83	79	75	70	56
2CP 32/210A	7.5	10		112	111	110.8	110.5	110.3	110	109	108	107	105	102	99	94	89	74

Q = Flow rate **H** = Total manometric head **HS** = Suction height

Tolerance of characteristic curves in compliance with EN ISO 9906 App. A.

CHARACTERISTIC CURVES AND PERFORMANCE DATA

50 Hz n= 2900 1/min HS= 0 m

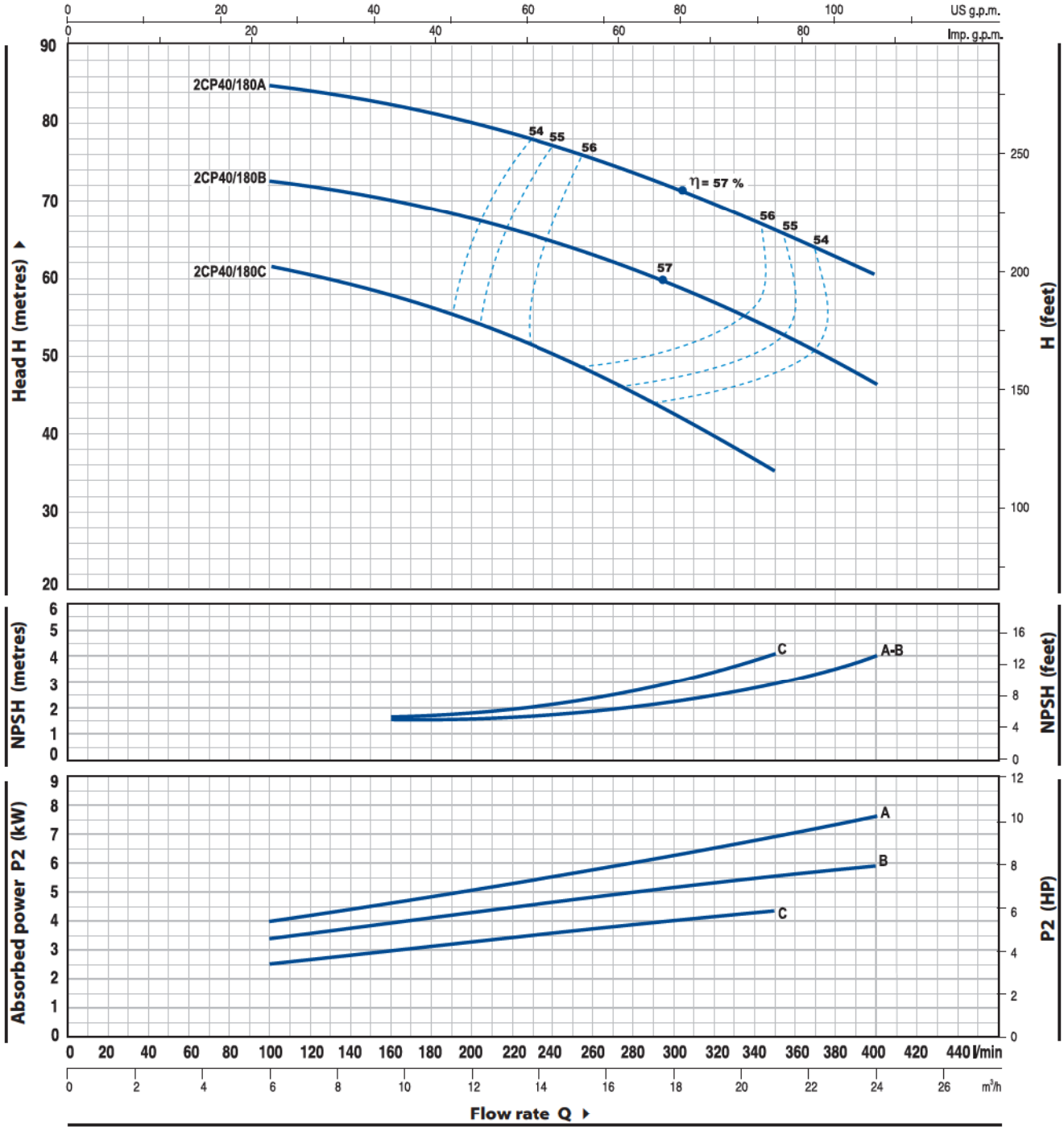

MODEL	POWER		Q m³/h	0	6.0	6.6	7.5	8.4	9.6	10.8	12.0	15.0	18.0	21.0	24.0
Three-phase	kW	HP	l/min	**0**	**100**	**110**	**125**	**140**	**160**	**180**	**200**	**250**	**300**	**350**	**400**
2CP 40/180C	4	5.5		64	62	61	60	59	58	56	54.5	49	43	35	
2CP 40/180B	5.5	7.5	**H** metres	76	73	72.5	72	71	70	69	67.5	64	59.5	54	46
2CP 40/180A	7.5	10		88	85	84.5	84	83	82	81	79.5	76	72	67	60

Q = Flow rate **H** = Total manometric head **HS** = Suction height

Tolerance of characteristic curves in compliance with EN ISO 9906 App. A.

CHARACTERISTIC CURVES AND PERFORMANCE DATA

50 Hz n= 2900 1/min HS= 0 m

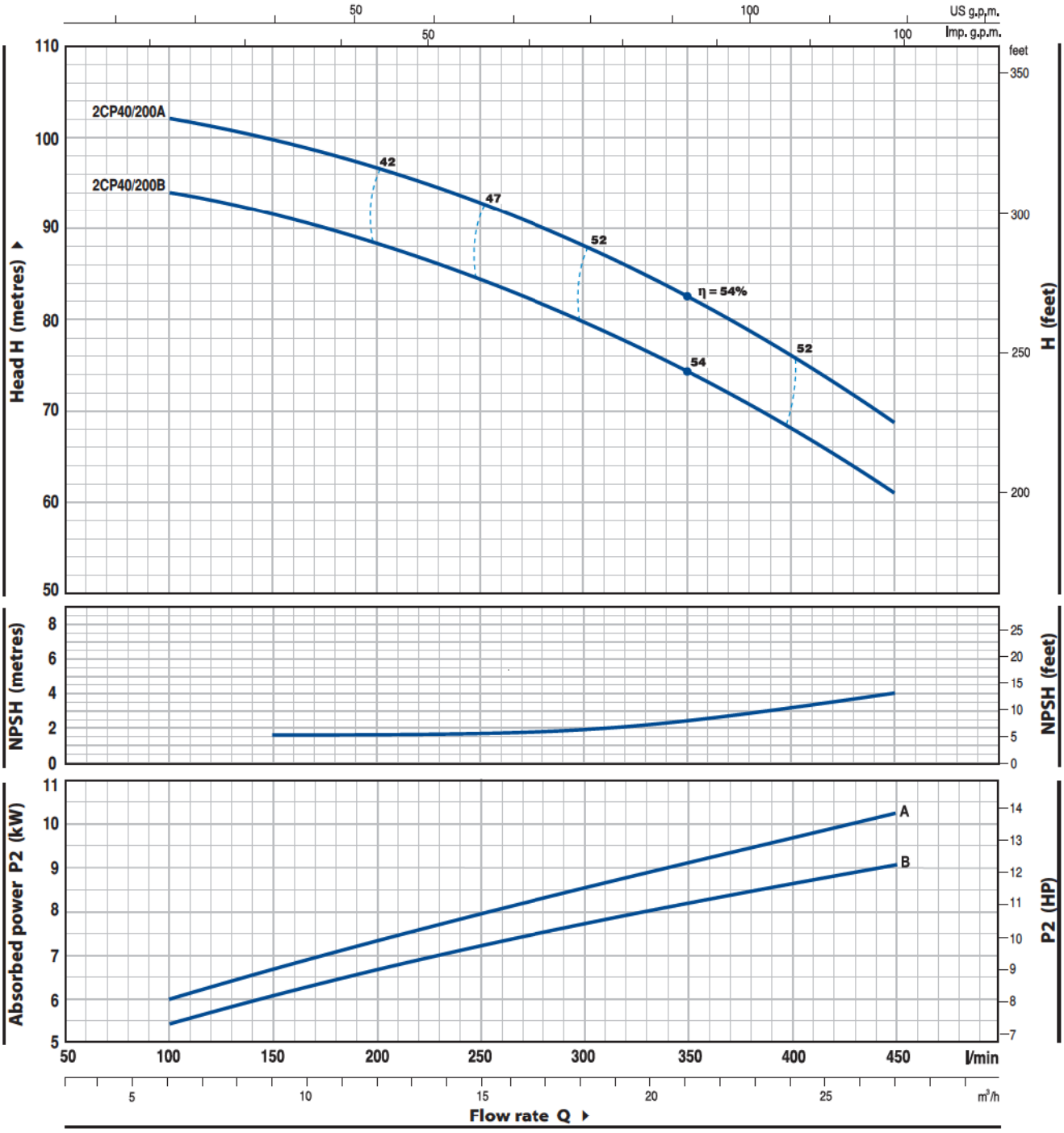

MODEL	POWER		Q										
Three-phase	kW	HP	m³/h	0	6.0	9	10.8	12.0	15.0	18.0	21.0	24.0	27.0
			l/min	**0**	**100**	**150**	**180**	**200**	**250**	**300**	**350**	**400**	**450**
2CP 40/200B	9.2	12.5	H metres	97	94	92	90	88	85	80	74	68	61
2CP 40/200A	11	15		105	102	100	98	97	93	88	83	76	69

Q = Flow rate **H** = Total manometric head **HS** = Suction height

Tolerance of characteristic curves in compliance with EN ISO 9906 App. A.

2CP 25/130N

POS.	COMPONENT	CONSTRUCTION CHARACTERISTICS
1	**PUMP BODY**	Cast iron, complete with threaded ports in compliance with ISO 228/1
2	**BODY BACKPLATE**	Stainless steel AISI 304
3	**IMPELLERS**	Stainless steel AISI 304
4	**MOTOR SHAFT**	Stainless steel EN 10088-3 - 1.4104

5 MECHANICAL SEAL

Seal	*Shaft*	*Materials*		
Model	***Diameter***	*Stationary ring*	*Rotational ring*	*Elastomer*
AR-14	**Ø 14** mm	Ceramic	Graphite	NBR

6 BEARINGS **6203 ZZ / 6203 ZZ**

7 CAPACITOR

Pump	*Capacitance*	
Single-phase	***(230 V or 240 V)***	***(110 V)***
2CPm 25/130N	**20** µF 450 VL	**60** µF 300 VL

8 ELECTRIC MOTOR

2CPm 25/130N: single-phase 230 V - 50 Hz with thermal overload protector built-in to the winding.
2CP 25/130N: three-phase 230/400 V - 50 Hz.

➠ **Pump fitted with the three-phase motor option offers IE2 (IEC 60034-30) class high performance**

– Insulation: F class.
– Protection: IP 44.

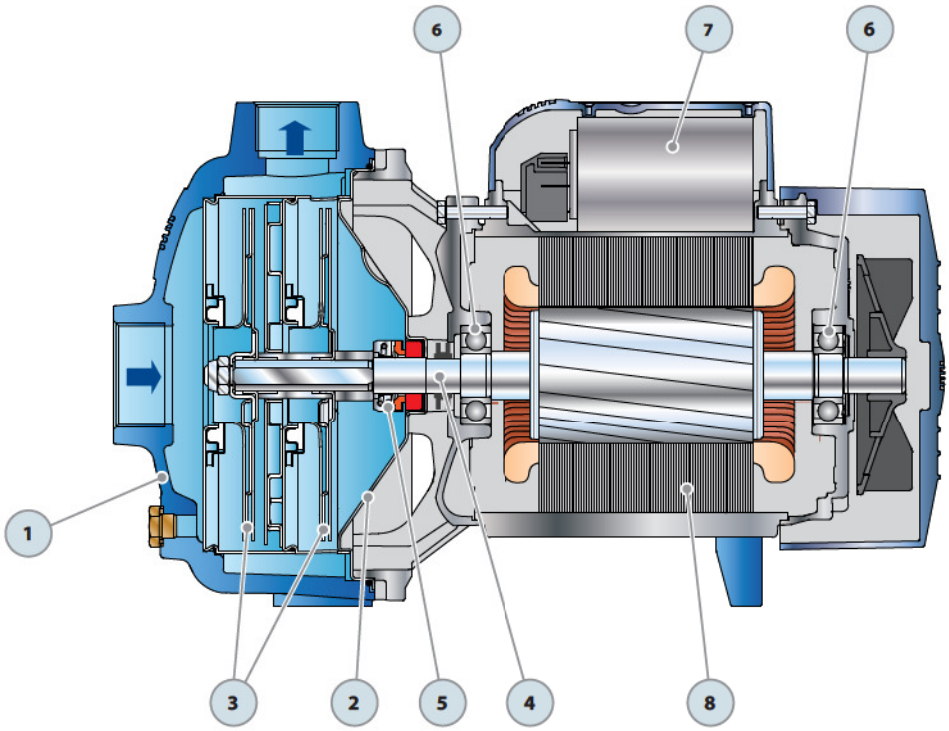

DIMENSIONS AND WEIGHT

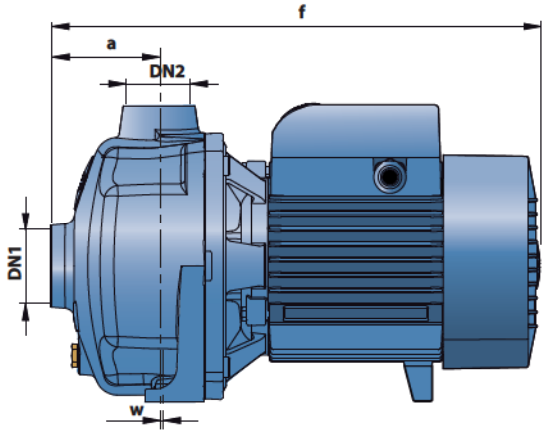

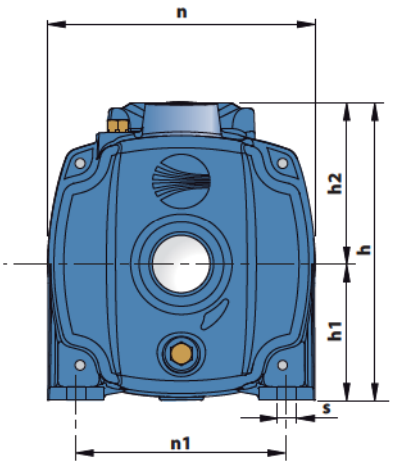

MODEL		PORTS		DIMENSIONS mm									kg	
Single-phase	Three-phase	DN1	DN2	a	f	h	h1	h2	n	n1	w	s	1~	3~
2CPm 25/130N	2CP 25/130N	**1¼"**	**1"**	73	330	201	92	109	180	142	1	10	**14.5**	**14.0**

ABSORPTION

MODEL	VOLTAGE (single-phase)		
Single-phase	230 V	240 V	110 V
2CPm 25/130N	**6.3** A	**6.0** A	**12.6** A

MODEL	VOLTAGE (three-phase)					
Three-phase	230 V	400 V	690 V	240 V	415 V	720 V
2CP 25/130N	**4.6** A	**2.6** A	**1.5** A	**4.3** A	**2.5** A	**1.5** A

PALLETIZATION

MODEL		GROUPAGE				CONTAINER			
		n°	H	kg		n°	H	kg	
Single-phase	Three-phase	pumps	(mm)	1~	3~	pumps	(mm)	1~	3~
2CPm 25/130N	2CP 25/130N	**60**	1320	890	860	**84**	1790	1240	1200

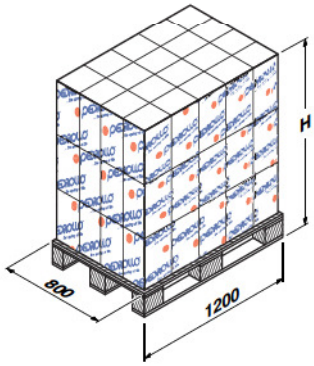

2CP

POS.	COMPONENT	CONSTRUCTION CHARACTERISTICS
1	PUMP BODY	Cast iron, complete with threaded ports in compliance with ISO 228/1
2	IMPELLERS	Brass
3	MOTOR SHAFT	Stainless steel EN 10088-3 - 1.4104

4 MECHANICAL SEAL

Pump	*Seal*	*Shaft*	*Materials*		
Model	*Model*	*Diameter*	*Stationary ring*	*Rotational ring*	*Elastomer*
2CP 25/140 **2CP 25/160** **2CP 160/160**	**FN-18**	**Ø 18** mm	Graphite	Ceramic	NBR
2CP 32/200	**FN-20**	**Ø 20** mm	Graphite	Ceramic	NBR
2CP 32/210 **2CP 40/180**	**FN-24**	**Ø 24** mm	Graphite	Ceramic	NBR
2CP 40/200	**FN-32 NU**	**Ø 32** mm	Graphite	Ceramic	NBR

5 BEARINGS

Pump	*Model*
2CP 25/140 **2CP 25/160** **2CP 160/160**	**6204 ZZ / 6204 ZZ**
2CP 32/200	**6206 ZZ - C3 / 6206 ZZ - C3**
2CP 32/210 **2CP 40/180**	**6306 ZZ - C3 / 6206 ZZ - C3**
2CP 40/200	**6308 ZZ - C3 / 6308 ZZ - C3**

6 CAPACITOR

Pump	*Capacitance*	
Single-phase	*(230 V or 240 V)*	*(110 V)*
2CPm 25/140	**25** µF 450 VL	**60** µF 250 VL
2CPm 160/160	**45** µF 450 VL	**80** µF 250 VL
2CPm 25/160B	**45** µF 450 VL	**80** µF 250 VL

7 ELECTRIC MOTOR

2CPm: single-phase 230 V - 50 Hz with thermal overload protector built-in to the winding.
2CP: three-phase 230/400 V - 50 Hz up to 4 kW.
400/690 V - 50 Hz from 5.5 to 11 kW

➡ **Pumps fitted with the three-phase motor option offer IE2 (IEC 60034-30) class high performance**

– Insulation: F class.
– Protection: IP 44.

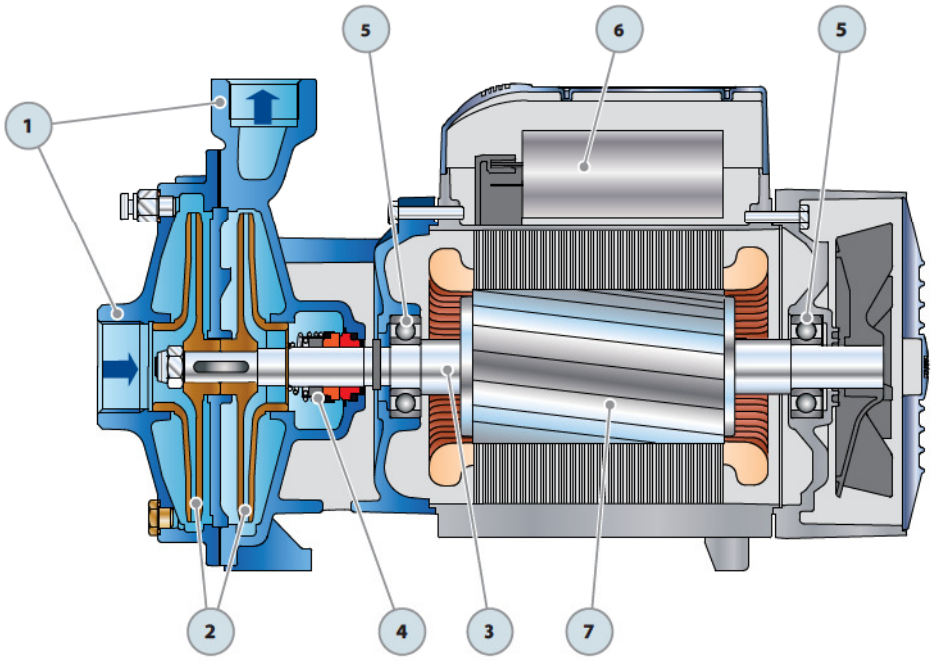

DIMENSIONS AND WEIGHT

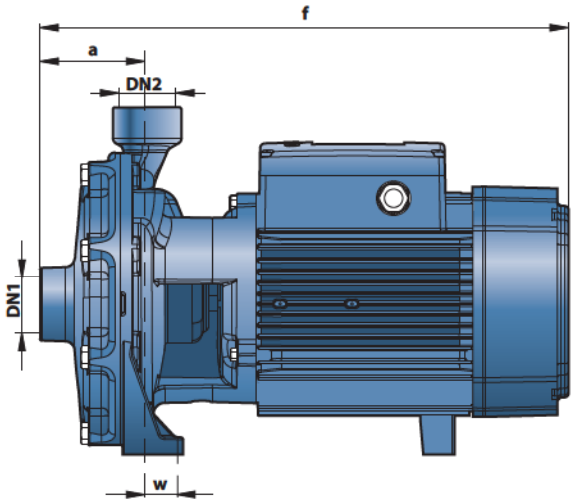

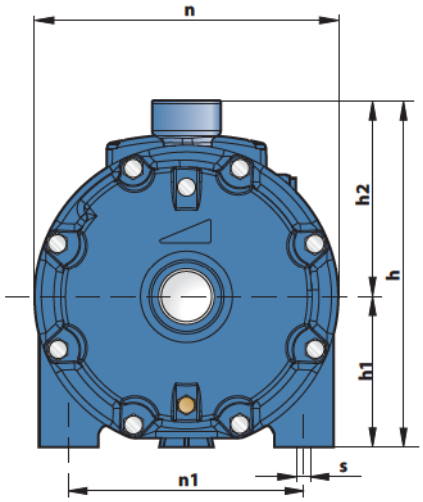

MODEL		PORTS		DIMENSIONS mm									kg	
Single-phase	Three-phase	DN1	DN2	a	f	h	h1	h2	n	n1	w	s	1~	3~
2CPm 25/140H	2CP 25/140H	1¼"	1"	74	382	225	93	132	200	162	23	10	**18.9**	**18.3**
2CPm 160/160	2CP 160/160			84	405	263	110	153	225	185	26	11	**24.5**	**23.3**
2CPm 25/140M	2CP 25/140M	1½"		74	382	225	93	132	200	162	23	10	**18.9**	**18.3**
2CPm 25/160B	2CP 25/160B-A			86	407	263	110	153	225	185	26	11	**24.3**	**23.2/ 24.5**
–	2CP 32/200C-B		1¼"	95	464	304	132	172	266	206	19	14	–	**38.0/43.0**
–	2CP 32/210B-A	2"	1½"	108	542	334	139	195	292	232	21		–	**54.0/61.0**
–	2CP 40/180C				496								–	**49.0**
–	2CP 40/180B-A				542								–	**54.0/60.0**
–	2CP 40/200B-A			110	566	355	160	195	298				–	**89.0/90.0**

ABSORPTION

MODEL	VOLTAGE (single-phase)		
Single-phase	230 V	240 V	110 V
2CPm 25/140H	**7.6** A	**7.0** A	**15.2** A
2CPm 160/160	**11.0** A	**10.0** A	**21.0** A
2CPm 25/140M	**8.0** A	**7.3** A	**16.0** A
2CPm 25/160B	**11.0** A	**10.0** A	**21.0** A

MODEL	VOLTAGE (three-phase)					
Three-phase	230 V	400 V	690 V	240 V	415 V	720 V
2CP 25/140H	**5.7** A	**3.3** A	**1.9** A	**5.2** A	**3.0** A	**1.7** A
2CP 160/160	**8.0** A	**4.6** A	**2.7** A	**7.0** A	**4.0** A	**2.3** A
2CP 25/140M	**5.9** A	**3.4** A	**2.0** A	**5.4** A	**3.1** A	**1.8** A
2CP 25/160B	**8.0** A	**4.6** A	**2.7** A	**7.7** A	**4.4** A	**2.6** A
2CP 25/160A	**9.3** A	**5.4** A	**3.1** A	**8.7** A	**5.0** A	**2.9** A
2CP 32/200C	**12.8** A	**7.4** A	**4.3** A	**12.3** A	**7.1** A	**4.1** A
2CP 32/200B	**18.2** A	**10.5** A	**6.1** A	**17.7** A	**10.2** A	**5.9** A
2CP 32/210B	**21.7** A	**12.5** A	**7.2** A	**19.9** A	**11.5** A	**6.7** A
2CP 32/210A	**27.7** A	**16.0** A	**9.2** A	**26.0** A	**15.0** A	**8.7** A
2CP 40/180C	**17.0** A	**9.8** A	**5.7** A	**16.5** A	**9.5** A	**5.5** A
2CP 40/180B	**21.3** A	**12.3** A	**7.1** A	**20.8** A	**12.0** A	**6.9** A
2CP 40/180A	**26.7** A	**15.4** A	**8.9** A	**26.0** A	**15.0** A	**8.7** A
2CP 40/200B	–	**17.5** A	**10.1** A	–	**17.5** A	**10.1** A
2CP 40/200A	–	**20.0** A	**11.5** A	–	**20.0** A	**11.5** A

PALLETIZATION

MODEL		GROUPAGE				CONTAINER			
		n°	H (mm)	kg		n°	H (mm)	kg	
Single-phase	Three-phase	pumps		1~	3~	pumps		1~	3~
2CPm 25/140H	2CP 25/140H	**50**	1370	960	930	**70**	1860	1340	1300
2CPm 160/160	2CP 160/160	**50**	1540	1240	1180	**70**	2100	1730	1650
2CPm 25/140M	2CP 25/140M	**50**	1370	960	930	**70**	2860	1340	1300
2CPm 25/160B	2CP 25/160B	**50**	1540	1230	1180	**70**	2100	1720	1640
–	2CP 25/160A	**50**	1540	–	1240	**70**	2100	–	1730
–	2CP 32/200C	**18**	1420	–	700	**24**	1840	–	930
–	2CP 32/200B	**18**	1420	–	790	**24**	1840	–	1050
–	2CP 32/210B	**12**	1420	–	670	**16**	1840	–	880
–	2CP 32/210A	**12**	1420	–	750	**16**	1840	–	1000
–	2CP 40/180C	**12**	1420	–	610	**16**	1840	–	800
–	2CP 40/180B	**12**	1420	–	670	**16**	1840	–	880
–	2CP 40/180A	**12**	1420	–	740	**16**	1840	–	980
–	2CP 40/200B	**6**	1200	–	551	**9**	1730	–	818
–	2CP 40/200A	**6**	1200	–	557	**9**	1730	–	827

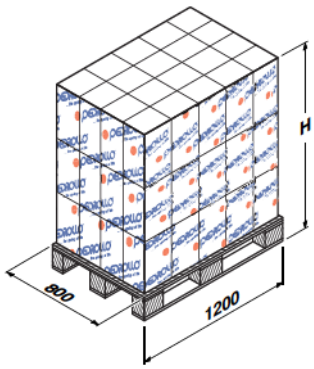

2÷4CP

Multi-stage centrifugal pumps

PERFORMANCE RANGE

- Flow rate up to **130 l/min** (7.8 m^3/h)
- Head up to **50 m**

APPLICATION LIMITS

- Manometric suction lift up to **7 m**
- Liquid temperature between **-10 °C** and **+40 °C**
- Ambient temperature up to **+40 °C**
- Max. working pressure **6 bar**
- Continuous service **S1**

SAFETY STANDARDS

EN 60335-1	**EN 60034-1**
IEC 60335-1	**IEC 60034-1**
CEI 61-150	**CEI 2-3**

CERTIFICATIONS

АИЗО

УкрТЕСТ-003

INSTALLATION AND USE

Suitable for use with clean water and liquids that are not chemically aggressive towards the materials from which the pump is made. As a result of their quietness, these pumps are widely used in domestic applications such as the distribution of water in combination with small and medium sized pressure sets, and for the irrigation of gardens and allotments, etc.
The pump should be installed in an enclosed environment, or at least sheltered from inclement weather.

PATENTS - TRADE MARKS - MODELS

- Registered Community Design n° 342159-0006

OPTIONALS AVAILABLE ON REQUEST

- Other voltages or 60 Hz frequency

GUARANTEE

2 years subject to terms and conditions

CHARACTERISTIC CURVES AND PERFORMANCE DATA

50 Hz n= 2900 1/min HS= 0 m

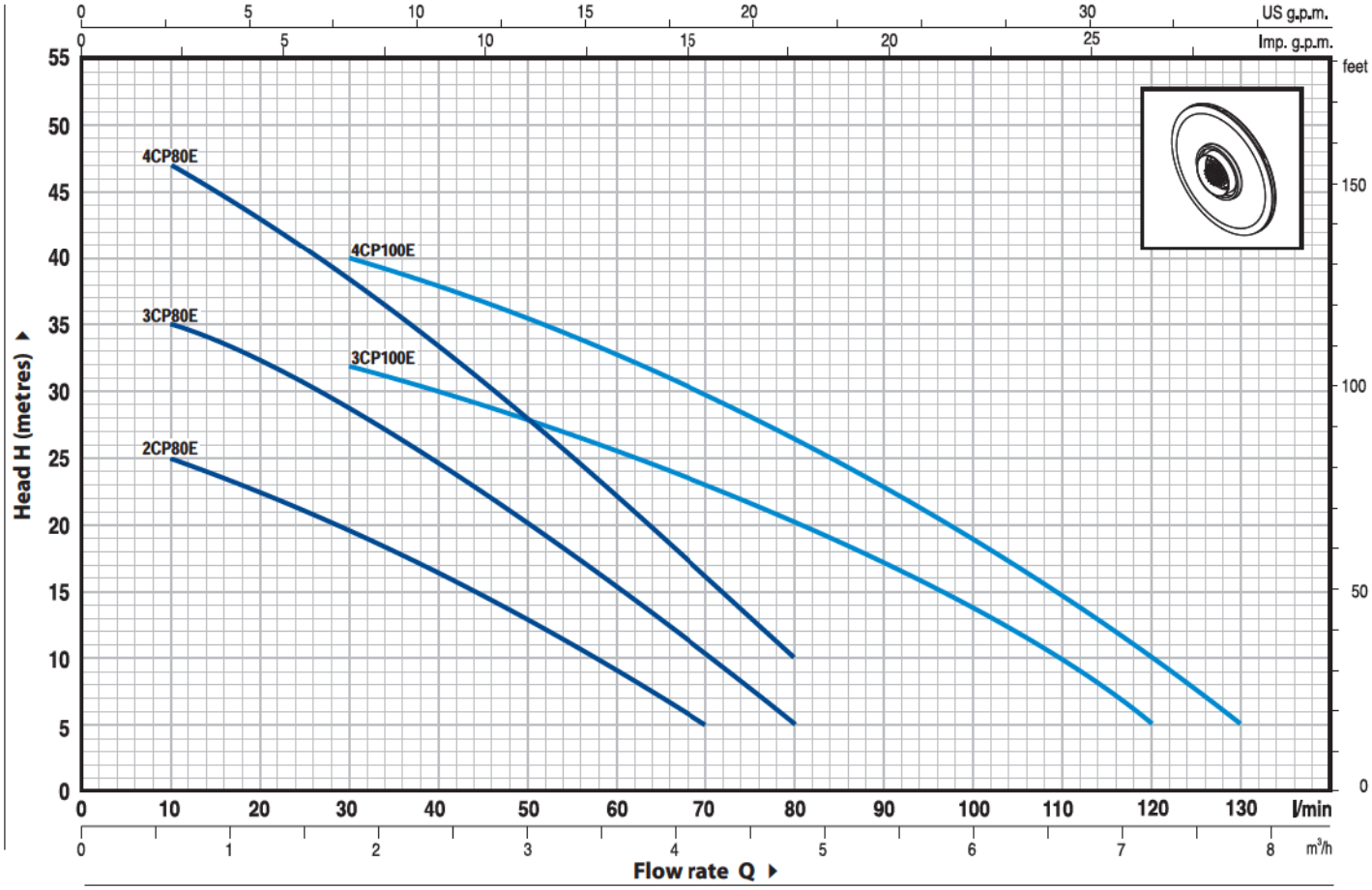

MODEL		POWER		Q m³/h	0	0.3	0.6	0.9	1.2	1.5	1.8	2.4	3.0	3.6	4.2	4.8	5.4	6.0	6.6	7.2	7.8
Single-phase	Three-phase	kW	HP	Q l/min	**0**	**5**	**10**	**15**	**20**	**25**	**30**	**40**	**50**	**60**	**70**	**80**	**90**	**100**	**110**	**120**	**130**
2CPm 80E	–	0.37	0.50		27	26	25	24	22.5	21	20	16.5	13	9	5						
3CPm 80E	**3CP 80E**	0.45	0.60		38	36	35	34	33.5	31	29	25	20	15.5	10	5					
4CPm 80E	**4CP 80E**	0.60	0.85	**H** metres	50	48	47	45	43	40.5	38.5	33.5	28	22.5	16	10					
3CPm 100E	**3CP 100E**	0.60	0.85		36	35.5	35	34	33.5	32.5	32	30	28	26	23	20	17	13.5	10	5	
4CPm 100E	**4CP 100E**	0.75	1		46	45	44	43	42	41	40	38	35.5	33	30	26.5	22.5	19	15	10	5

Q = Flow rate **H** = Total manometric head **HS** = Suction height

Tolerance of characteristic curves in compliance with EN ISO 9906 App. A.

POS.	COMPONENT	CONSTRUCTION CHARACTERISTICS
1	**PUMP BODY**	Cast iron, complete with threaded ports in compliance with ISO 228/1
2	**BODY BACKPLATE**	Stainless steel AISI 304
3	**IMPELLERS**	Noryl GFN2V
4	**MOTOR SHAFT**	Stainless steel EN 10088-3 - 1.4104

5 MECHANICAL SEAL

Seal	*Shaft*	*Materials*		
Model	***Diameter***	*Stationary ring*	*Rotational ring*	*Elastomer*
AR-13	**Ø 13** mm	Ceramic	Graphite	NBR

6 BEARINGS

Pump	*Model*
2CPm 80E **3CPm 80E** **4CPm 80E** **3CP 100E**	**6202 ZZ - C3 / 6201 ZZ**
4CP 100E	**6203 ZZ / 6203 ZZ**

7 CAPACITOR

Pump	*Capacitance*	
Single-phase	***(230 V or 240 V)***	***(110 V)***
2CPm 80E	**10** µF 450 VL	**25** µF 250 VL
3CPm 80E	**12.5** µF 450 VL	**30** µF 250 VL
4CPm 80E **3CPm 100E**	**14** µF 450 VL	**30** µF 250 VL
4CPm 100E	**20** µF 450 VL	**60** µF 300 VL

8 ELECTRIC MOTOR

2-3-4CPm: single-phase 230 V - 50 Hz with thermal overload protector built-in to the winding.
2-3-4CP: three-phase 230/400 V - 50 Hz.

➡ **Pumps fitted with the three-phase motor option offer IE2 (IEC 60034-30) class high performance**

– Insulation: F class.
– Protection: IP 44.

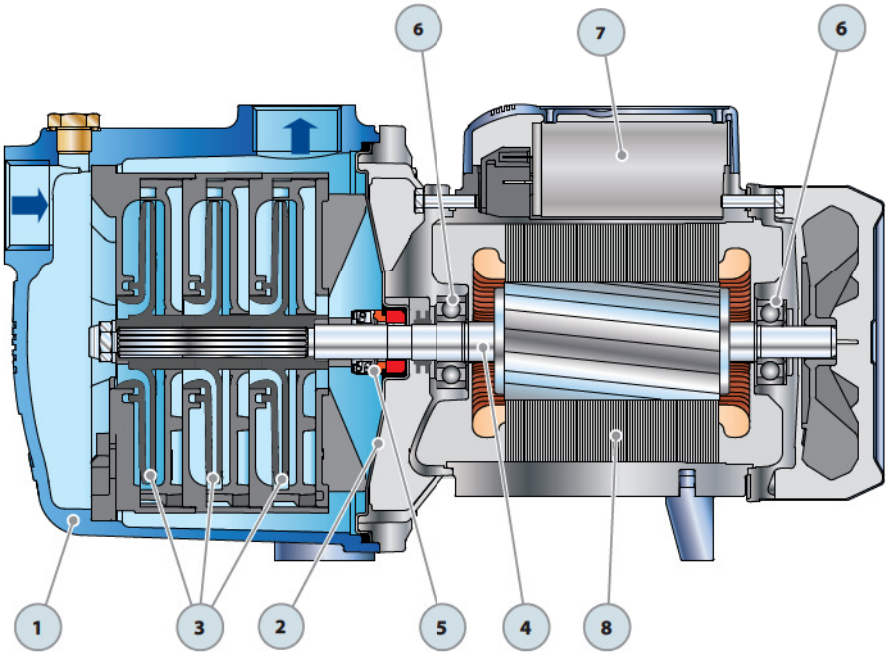

DIMENSIONS AND WEIGHT

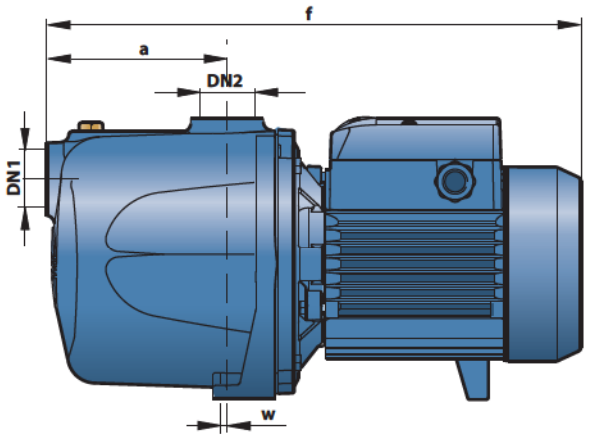

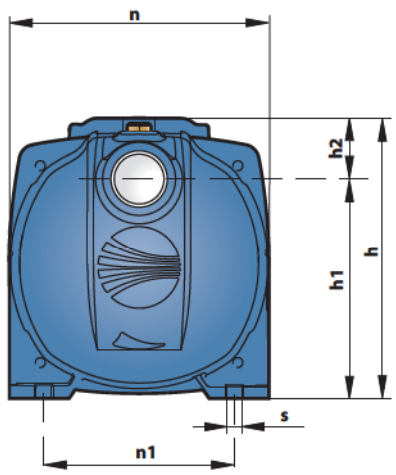

MODEL		PORTS		DIMENSIONS mm									kg	
Single-phase	Three-phase	DN1	DN2	a	f	h	h1	h2	n	n1	w	s	1~	3~
2CPm 80E	–	1"	1"	110	334	172	134	38	158	116	2	9	**9.0**	–
3CPm 80E	3CP 80E												**9.8**	**9.3**
4CPm 80E	4CP 80E			135	357								**11.0**	**10.4**
3CPm 100E	3CP 100E			110	334								**10.4**	**9.9**
4CPm 100E	4CP 100E			135	378	191		61					**13.7**	**12.7**

ABSORPTION

MODEL	VOLTAGE (single-phase)		
Single-phase	230 V	240 V	110 V
2CPm 80E	**2.4** A	**2.4** A	**4.8** A
3CPm 80E	**3.4** A	**3.3** A	**6.8** A
4CPm 80E	**4.3** A	**4.2** A	**8.6** A
3CPm 100E	**4.1** A	**4.0** A	**8.2** A
4CPm 100E	**6.0** A	**5.8** A	**12.0** A

MODEL	VOLTAGE (three-phase)					
Three-phase	230 V	400 V	690 V	240 V	415 V	720 V
3CP 80E	**2.5** A	**1.4** A	**0.8** A	**2.4** A	**1.4** A	**0.8** A
4CP 80E	**3.4** A	**2.0** A	**1.1** A	**3.3** A	**1.9** A	**1.1** A
3CP 100E	**3.1** A	**1.8** A	**1.0** A	**3.0** A	**1.7** A	**1.0** A
4CP 100E	**4.5** A	**2.6** A	**1.5** A	**4.3** A	**2.5** A	**1.4** A

PALLETIZATION

MODEL		GROUPAGE				CONTAINER			
		n°	H	kg		n°	H	kg	
Single-phase	Three-phase	pumps	(mm)	1~	3~	pumps	(mm)	1~	3~
2CPm 80E	–	**98**	1440	900	–	**154**	2180	1400	–
3CPm 80E	3CP 80E	**98**	1440	980	930	**154**	2180	1530	1450
4CPm 80E	4CP 80E	**98**	1440	1100	1040	**154**	2180	1710	1620
3CPm 100E	3CP 100E	**98**	1440	1040	990	**154**	2180	1620	1540
4CPm 100E	4CP 100E	**98**	1540	1360	1260	**140**	2140	1940	1800

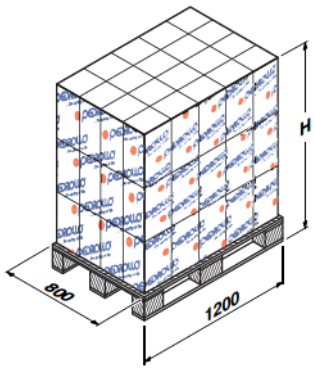

2÷4CR

Multi-stage centrifugal pumps

PERFORMANCE RANGE

- Flow rate up to **120 l/min** (7.2 m^3/h)
- Head up to **50 m**

APPLICATION LIMITS

- Manometric suction lift up to **7 m**
- Liquid temperature between **-10 °C** and **+40 °C**
- Ambient temperature up to **+40 °C**
- Max. working pressure **6 bar**
- Continuous service **S1**

SAFETY STANDARDS

EN 60335-1	**EN 60034-1**
IEC 60335-1	**IEC 60034-1**
CEI 61-150	**CEI 2-3**

CERTIFICATIONS

АИЗО

УкрТЕСТ-003

INSTALLATION AND USE

Suitable for use with clean water and liquids that are not chemically aggressive towards the materials from which the pump is made. As a result of their quietness, these pumps are widely used in domestic applications such as the distribution of water in combination with small and medium sized pressure sets, and for the irrigation of gardens and allotments, etc.
The pump should be installed in an enclosed environment, or at least sheltered from inclement weather.

OPTIONALS AVAILABLE ON REQUEST

- Special mechanical seal
- Other voltages or 60 Hz frequency

GUARANTEE

2 years subject to terms and conditions

CHARACTERISTIC CURVES AND PERFORMANCE DATA

50 Hz n= 2900 1/min HS= 0 m

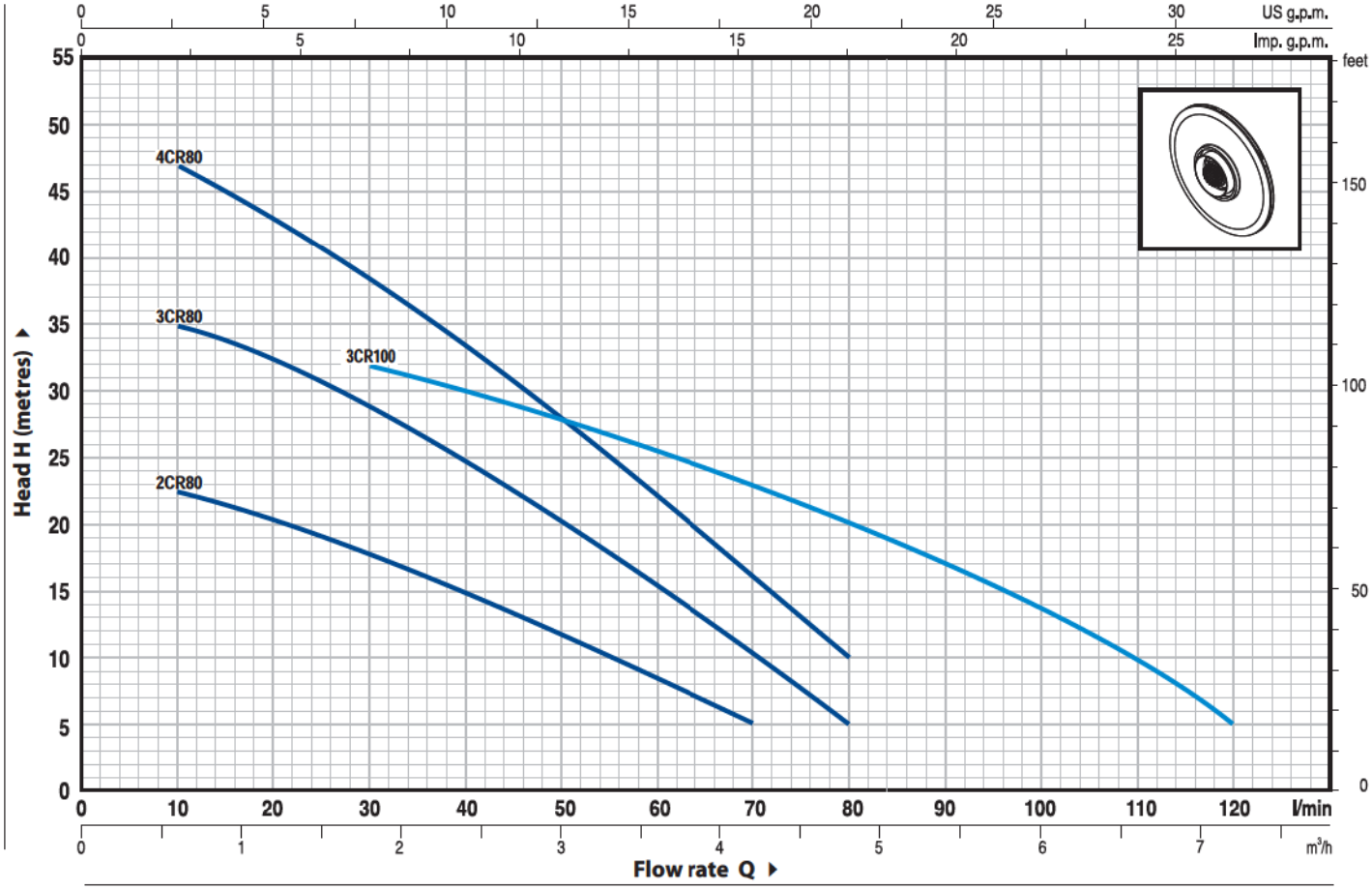

MODEL		POWER		Q m³/h	0	0.3	0.6	0.9	1.2	1.5	1.8	2.4	3.0	3.6	4.2	4.8	5.4	6.0	6.6	7.2
Single-phase	Three-phase	kW	HP	Q l/min	**0**	**5**	**10**	**15**	**20**	**25**	**30**	**40**	**50**	**60**	**70**	**80**	**90**	**100**	**110**	**120**
2CRm 80	–	0.37	0.50	H metres	25	24	22.5	21.5	20	19	17.5	15	11.5	8	5					
3CRm 80	**3CR 80**	0.45	0.60		38	36	35	34	32.5	31	29	25	20	15.5	10	5				
4CRm 80	**4CR 80**	0.60	0.85		50	48	47	45	43	40.5	38.5	33.5	28	22.5	16	10				
3CRm 100	**3CR 100**	0.60	0.85		36	35.5	35	34	33.5	32.5	32	30	28	25.5	23	20	17	13.5	10	5

Q = Flow rate **H** = Total manometric head **HS** = Suction height

Tolerance of characteristic curves in compliance with EN ISO 9906 App. A.

POS.	COMPONENT	CONSTRUCTION CHARACTERISTICS
1	**PUMP BODY**	Stainless steel AISI 304, complete with threaded ports in compliance with ISO 228/1
2	**BODY BACKPLATE**	Stainless steel AISI 304
3	**IMPELLERS**	Noryl GFN2V
4	**MOTOR SHAFT**	Stainless steel EN 10088-3 - 1.4104

5 MECHANICAL SEAL

Seal	*Shaft*	*Materials*		
Model	***Diameter***	*Stationary ring*	*Rotational ring*	*Elastomer*
AR-13	**Ø 13** mm	Ceramic	Graphite	NBR

6 BEARINGS **6202 ZZ- C3 / 6201 ZZ**

7 CAPACITOR

Pump	*Capacitance*	
Single-phase	***(230 V or 240 V)***	***(110 V)***
2CRm 80	**10** µF 450 VL	**25** µF 250 VL
3CRm 80	**12.5** µF 450 VL	**30** µF 250 VL
4CRm 80 **3CRm 100**	**14** µF 450 VL	**30** µF 250 VL

8 ELECTRIC MOTOR

2÷4CRm: single-phase 230 V - 50 Hz with thermal overload protector built-in to the winding.
2÷4CR: three-phase 230/400 V - 50 Hz.

➡ **Pumps fitted with the three-phase motor option offer IE2 (IEC 60034-30) class high performance**

– Insulation: F class.
– Protection: IP 44.

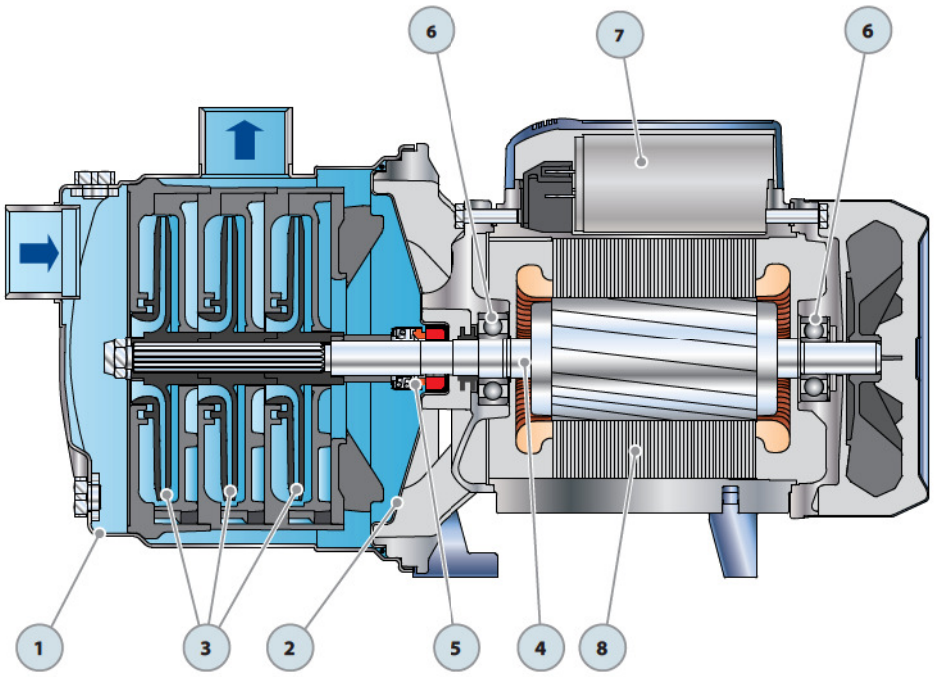

DIMENSIONS AND WEIGHT

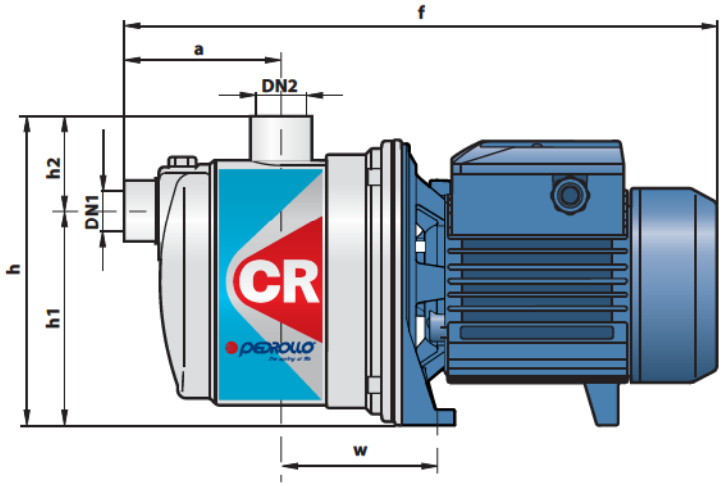

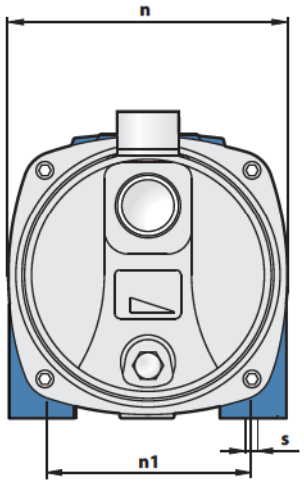

MODEL		PORTS		DIMENSIONS mm									kg	
Single-phase	Three-phase	DN1	DN2	a	f	h	h1	h2	n	n1	w	s	1~	3~
2CRm 80	–	1"	1"	90	345	174	122	52	160	120	88	9	**5.9**	–
3CRm 80	3CR 80												**6.8**	**6.2**
4CRm 80	4CR 80												**7.3**	**6.8**
3CRm 100	3CR 100												**7.2**	**6.7**

ABSORPTION

MODEL	VOLTAGE (single-phase)		
Single-phase	230 V	240 V	110 V
2CRm 80	**2.4** A	**2.4** A	**4.8** A
3CRm 80	**3.2** A	**2.9** A	**6.5** A
4CRm 80	**4.0** A	**3.6** A	**8.0** A
3CRm 100	**4 .0**A	**3.6** A	**8.0** A

MODEL	VOLTAGE (three-phase)					
Three-phase	230 V	400 V	690 V	240 V	415 V	720 V
3CR 80	**2.2** A	**1.3** A	**0.8** A	**2.1** A	**1.2** A	**0.7** A
4CR 80	**2.9** A	**1.7** A	**1.0** A	**2.8** A	**1.6** A	**0.9** A
3CR 100	**2.9** A	**1.7** A	**1.0** A	**2.8** A	**1.6** A	**0.9** A

PALLETIZATION

MODEL		GROUPAGE				CONTAINER			
		n°	H	kg		n°	H	kg	
Single-phase	Three-phase	pumps	(mm)	1~	3~	pumps	(mm)	1~	3~
2CRm 80	–	**98**	1440	600	–	**154**	2180	930	–
3CRm 80	3CR 80	**98**	1440	690	630	**154**	2180	1070	970
4CRm 80	4CR 80	**98**	1440	730	680	**154**	2180	1140	1070
3CRm 100	3CR 100	**98**	1440	720	680	**154**	2180	1130	1050

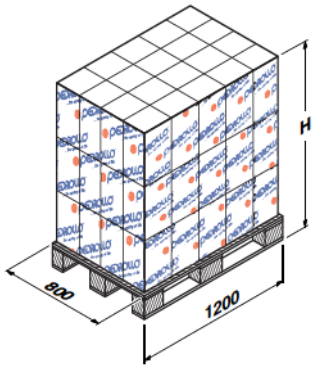

JSW1

Self-priming "JET" pumps

PERFORMANCE RANGE

- Flow rate up to **50 l/min** (3 m^3/h)
- Head up to **47 m**

APPLICATION LIMITS

- Manometric suction lift up to **9 m** (HS)
- Liquid temperature between **-10 °C** and **+40 °C**
- Ambient temperature up to **+40 °C**
- Max. working pressure **6 bar**
- Continuous service **S1**

CONSTRUCTION AND SAFETY STANDARDS

EN 60335-1
IEC 60335-1
CEI 61-150

EN 60034-1
IEC 60034-1
CEI 2-3

CERTIFICATIONS

АИЗО

УкрТЕСТ-003

INSTALLATION AND USE

Suitable for use with clean water and liquids that are not chemically aggressive towards the materials from which the pump is made. The self-priming JSW pumps are designed to pump water even in cases where air is present. As a result of their reliability and the fact that they are easy to use, they are recommended for use in domestic applications such as the distribution of water in combination with small or medium sized pressure sets, and for the irrigation of gardens and allotments, etc.
The pump should be installed in an enclosed environment, or at least sheltered from inclement weather.

PATENTS - TRADE MARKS - MODELS

- Registered Italian model nº 72753
- European Patent n° 1 510 696

OPTIONALS AVAILABLE ON REQUEST

- Pumps with technopolymer impeller
- Other voltages or 60 Hz frequency

GUARANTEE

2 years subject to terms and conditions

CHARACTERISTIC CURVES AND PERFORMANCE DATA

50 Hz n= 2900 1/min HS= 0 m

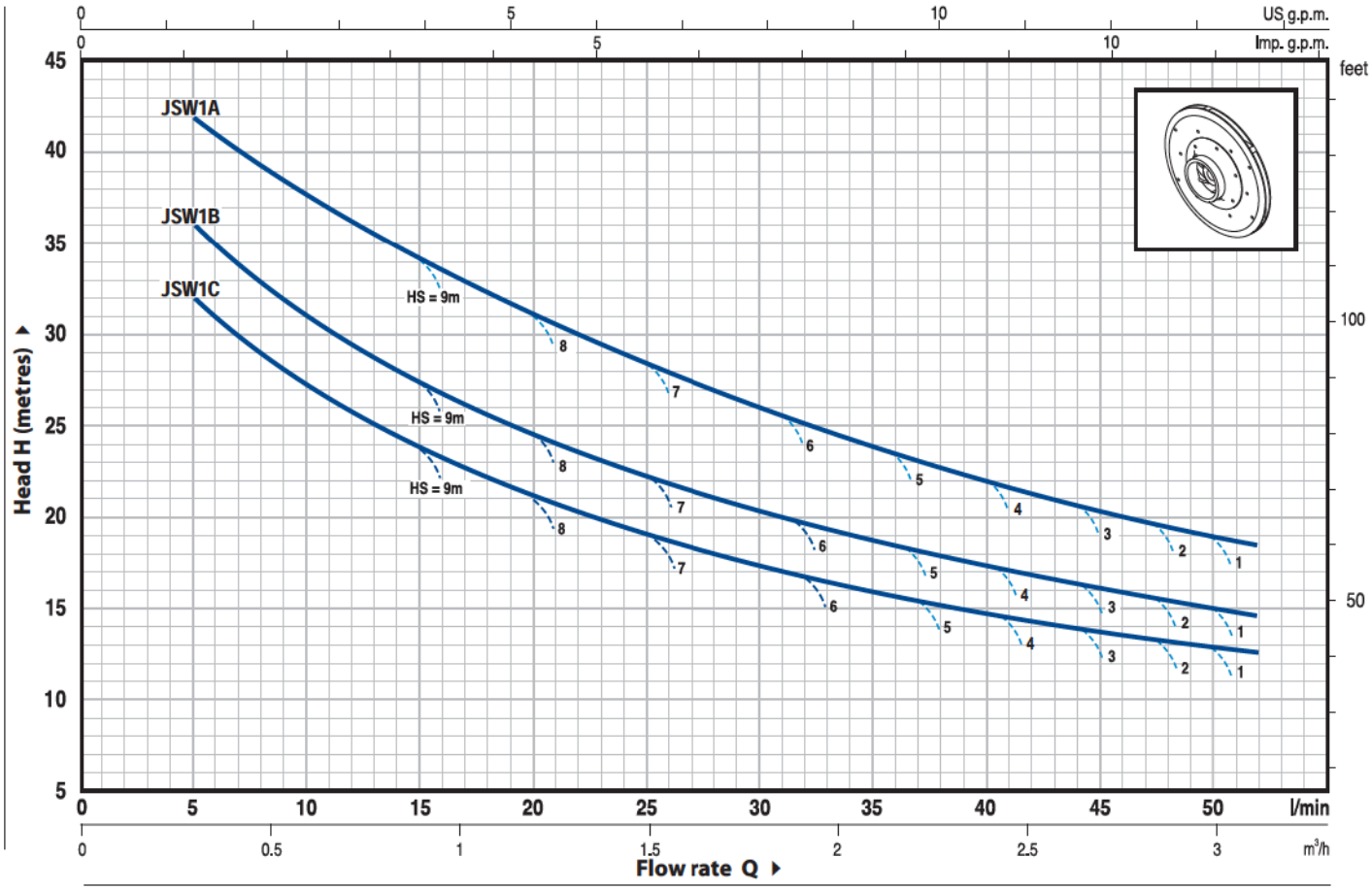

MODEL		POWER		Q m³/h	0	0.3	0.6	0.9	1.2	1.5	1.8	2.1	2.4	2.7	3.0
Single-phase	Three-phase	kW	HP	Q l/min	**0**	**5**	**10**	**15**	**20**	**25**	**30**	**35**	**40**	**45**	**50**
JSWm 1C	–	0.37	0.50		35	32	27	24	21	19	17	16	15	14	13
JSWm 1B	**JSW 1B**	0.50	0.70	**H** metres	41	36	31	27	24	22	20	19	17	16	15
JSWm 1A	**JSW 1A**	0.60	0.85		47	42	38	34	31	28.5	26	24	22	21.5	19

Q = Flow rate **H** = Total manometric head **HS** = Suction height

Tolerance of characteristic curves in compliance with EN ISO 9906 App. A.

INSTALLATION EXAMPLE

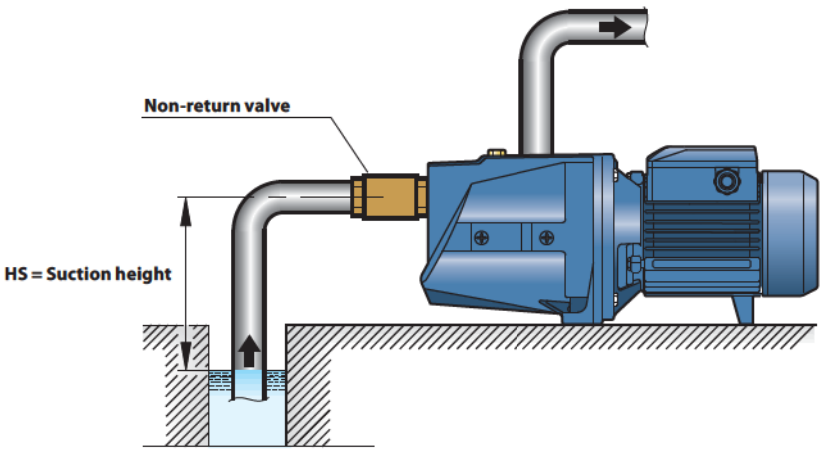

JSW1

POS.	COMPONENT	CONSTRUCTION CHARACTERISTICS
1	**PUMP BODY**	Cast iron, complete with threaded ports in compliance with ISO 228/1
2	**BODY BACKPLATE**	Stainless steel AISI 304
3	**NOZZLE ASSEMBLY**	Noryl GFN2V
4	**IMPELLER**	Brass
5	**MOTOR SHAFT**	Stainless steel EN 10088-3 - 1.4104

6 MECHANICAL SEAL

Seal	*Shaft*	*Materials*		
Model	***Diameter***	*Stationary ring*	*Rotational ring*	*Elastomer*
AR-12	**Ø 12 mm**	Ceramic	Graphite	NBR

7 BEARINGS **6201 ZZ / 6201 ZZ**

8 CAPACITOR

Pump	*Capacitance*	
Single-phase	***(230 V or 240 V)***	***(110 V)***
JSWm 1C	**10** µF 450 VL	**25** µF 250 VL
JSWm 1B	**10** µF 450 VL	**30** µF 250 VL
JSWm 1A	**14** µF 450 VL	**30** µF 250 VL

9 ELECTRIC MOTOR

JSWm: single-phase 230 V - 50 Hz with thermal overload protector built-in to the winding.
JSW: three-phase 230/400 V - 50 Hz.

➠ **Pumps fitted with the three-phase motor option offer IE2 (IEC 60034-30) class high performance**

– Insulation: F class.
– Protection: IP 44.

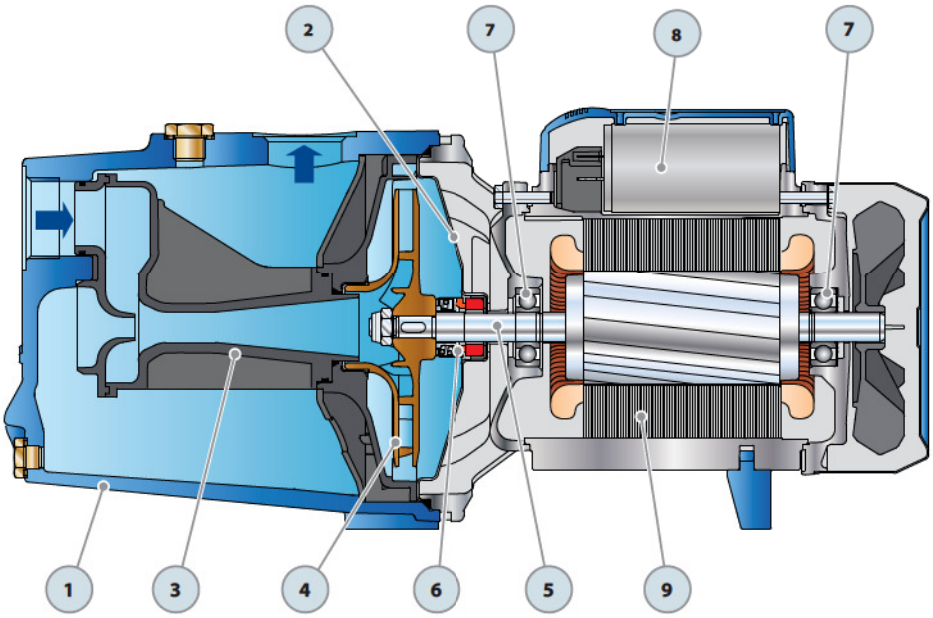

DIMENSIONS AND WEIGHT

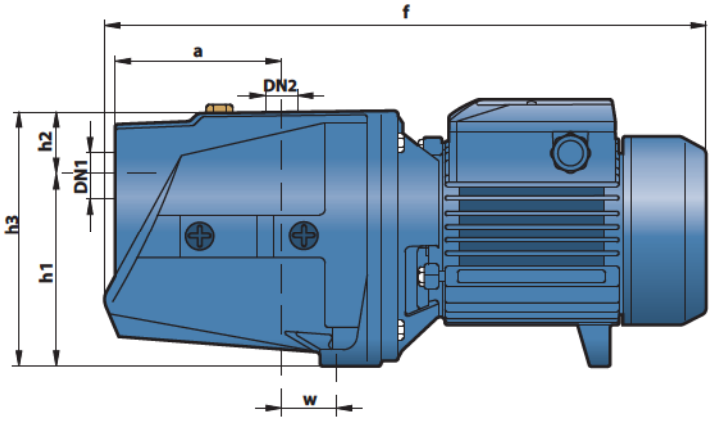

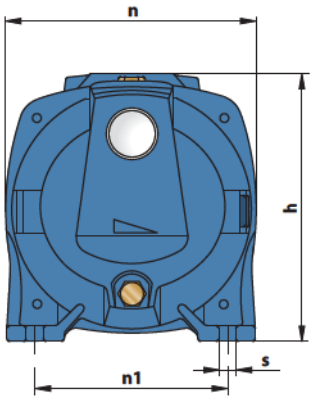

MODEL		PORTS		DIMENSIONS mm										kg	
Single-phase	Three-phase	DN1	DN2	a	f	h	h1	h2	h3	n	n1	w	s	1~	3~
JSWm 1C	–													**9.2**	–
JSWm 1B	JSW 1B	**1"**	**1"**	115	379	171	127	33.5	160.5	160	124	24	10	**10.0**	**9.5**
JSWm 1A	JSW 1A													**10.3**	**10.1**

ABSORPTION

MODEL	VOLTAGE (single-phase)		
Single-phase	230 V	240 V	110 V
JSWm 1C	**2.4** A	**2.2** A	**4.8** A
JSWm 1B	**3.2** A	**2.9** A	**6.5** A
JSWm 1A	**3.6** A	**3.3** A	**7.3** A

MODEL	VOLTAGE (three-phase)					
Three-phase	230 V	400 V	690 V	240 V	415 V	720 V
JSW 1B	**2.1** A	**1.2** A	**0.7** A	**2.0** A	**1.2** A	**0.7** A
JSW 1A	**2.8** A	**1.6** A	**0.9** A	**2.7** A	**1.6** A	**0.9** A

PALLETIZATION

MODEL		GROUPAGE				CONTAINER			
		n°	H	kg		n°	H	kg	
Single-phase	Three-phase	pumps	(mm)	1~	3~	pumps	(mm)	1~	3~
JSWm 1C	–	**98**	1440	920	–	**154**	2180	1440	–
JSWm 1B	JSW 1B	**98**	1440	1000	950	**154**	2180	1560	1480
JSWm 1A	JSW 1A	**98**	1440	1030	1010	**154**	2180	1600	1570

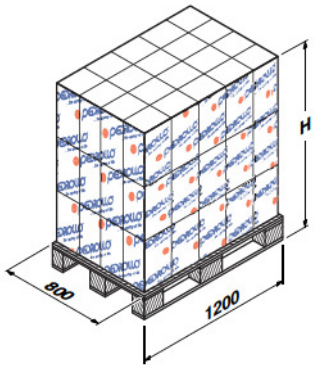

JSW2

Self-priming "JET" pumps

PERFORMANCE RANGE

- Flow rate up to **80 l/min** (4.8 m^3/h)
- Head up to **70 m**

APPLICATION LIMITS

- Manometric suction lift up to **9 m** (HS)
- Liquid temperature between **-10 °C** and **+40 °C**
- Ambient temperature up to **+40 °C**
- Max. working pressure **6.5 bar**
- Continuous service **S1**

CONSTRUCTION AND SAFETY STANDARDS

EN 60335-1	**EN 60034-1**
IEC 60335-1	**IEC 60034-1**
CEI 61-150	**CEI 2-3**

CERTIFICATIONS

АИЗО

УкрТЕСТ-003

INSTALLATION AND USE

Suitable for use with clean water and liquids that are not chemically aggressive towards the materials from which the pump is made. The self-priming JSW pumps are designed to pump water even in cases where air is present. As a result of their reliability and the fact that they are easy to use, they are recommended for use in domestic applications such as the distribution of water in combination with small or medium sized pressure sets, and for the irrigation of gardens and allotments, etc.
The pump should be installed in an enclosed environment, or at least sheltered from inclement weather.

PATENTS - TRADE MARKS - MODELS

- Registered Italian model nº 72753
- European Patent n° 1 510 696

OPTIONALS AVAILABLE ON REQUEST

- Pumps with technopolymer impeller
- Other voltages or 60 Hz frequency

GUARANTEE

2 years subject to terms and conditions

CHARACTERISTIC CURVES AND PERFORMANCE DATA

50 Hz n= 2900 1/min HS= 0 m

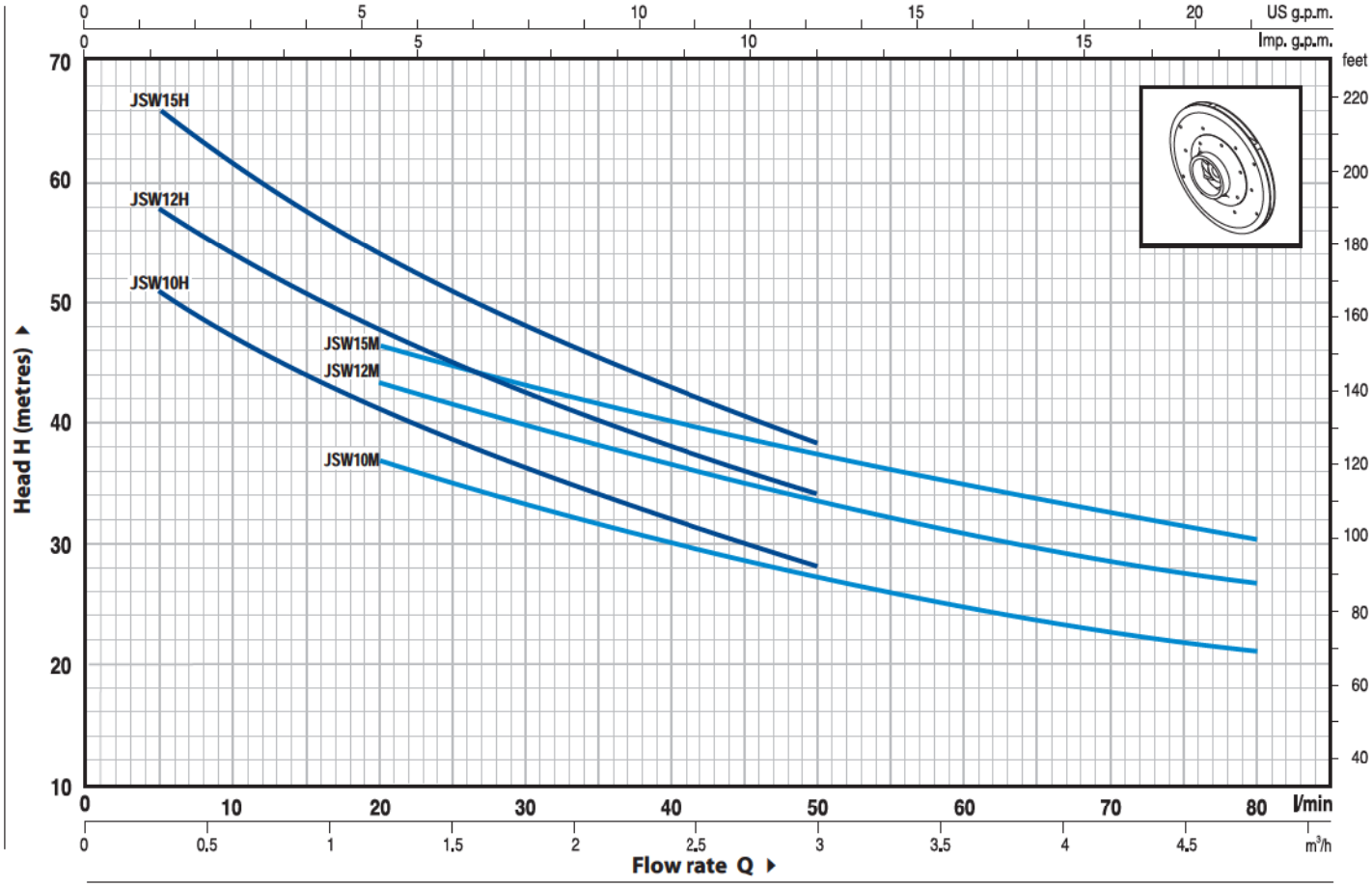

MODEL		POWER		Q m³/h	0	0.3	0.6	0.9	1.2	1.5	1.8	2.4	2.7	3.0	3.6	4.2	4.8
Single-phase	Three-phase	kW	HP	Q l/min	**0**	**5**	**10**	**15**	**20**	**25**	**30**	**40**	**45**	**50**	**60**	**70**	**80**
JSWm 10H	**JSW 10H**	0.75	1	H metres	56	51	47	44	41	39	36	32	30	28			
JSWm 12H	**JSW 12H**	0.90	1.25		64	58	54	51	48	45	43	38	36	34			
JSWm 15H	**JSW 15H**	1.1	1.5		70	66	62	58	54	51	48	43	41	38			
JSWm 10M	**JSW 10M**	0.75	1		46	42	40	38	37	35	33	30	29	27	25	23	21
JSWm 12M	**JSW 12M**	0.90	1.25		50	48	46	44	42	41	39	36	35	33	31	29	27
JSWm 15M	**JSW 15M**	1.1	1.5		55	52	50	48	46	45	43	40	39	37	35	33	30

Q = Flow rate **H** = Total manometric head **HS** = Suction height

Tolerance of characteristic curves in compliance with EN ISO 9906 App. A.

INSTALLATION EXAMPLE

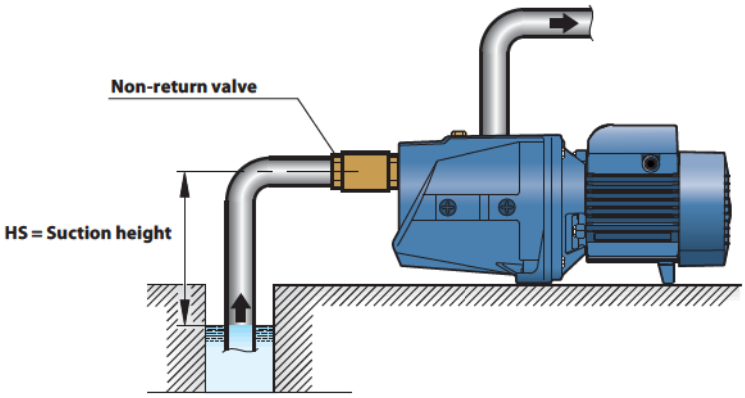

POS.	COMPONENT	CONSTRUCTION CHARACTERISTICS
1	PUMP BODY	Cast iron, complete with threaded ports in compliance with ISO 228/1
2	BODY BACKPLATE	Stainless steel AISI 304
3	NOZZLE ASSEMBLY	Noryl GFN2V
4	IMPELLER	Brass
5	MOTOR SHAFT	Stainless steel EN 10088-3 - 1.4104

6 MECHANICAL SEAL

Seal	*Shaft*	*Materials*		
Model	*Diameter*	*Stationary ring*	*Rotational ring*	*Elastomer*
AR-14	**Ø 14** mm	Ceramic	Graphite	NBR

7 BEARINGS **6203 ZZ / 6203 ZZ**

8 CAPACITOR

Pump	*Capacitance*	
Single-phase	*(230 V or 240 V)*	*(110 V)*
JSWm 10H-M	**20** µF 450 VL	**60** µF 300 VL
JSWm 12H-M	**25** µF 450 VL	**60** µF 300 VL
JSWm 15H-M	**25** µF 450 VL	**60** µF 300 VL

9 ELECTRIC MOTOR

JSWm: single-phase 230 V - 50 Hz with thermal overload protector built-in to the winding.
JSW: three-phase 230/400 V - 50 Hz.

➠ **Pumps fitted with the three-phase motor option offer IE2 (IEC 60034-30) class high performance**

– Insulation: F class.
– Protection: IP 44.

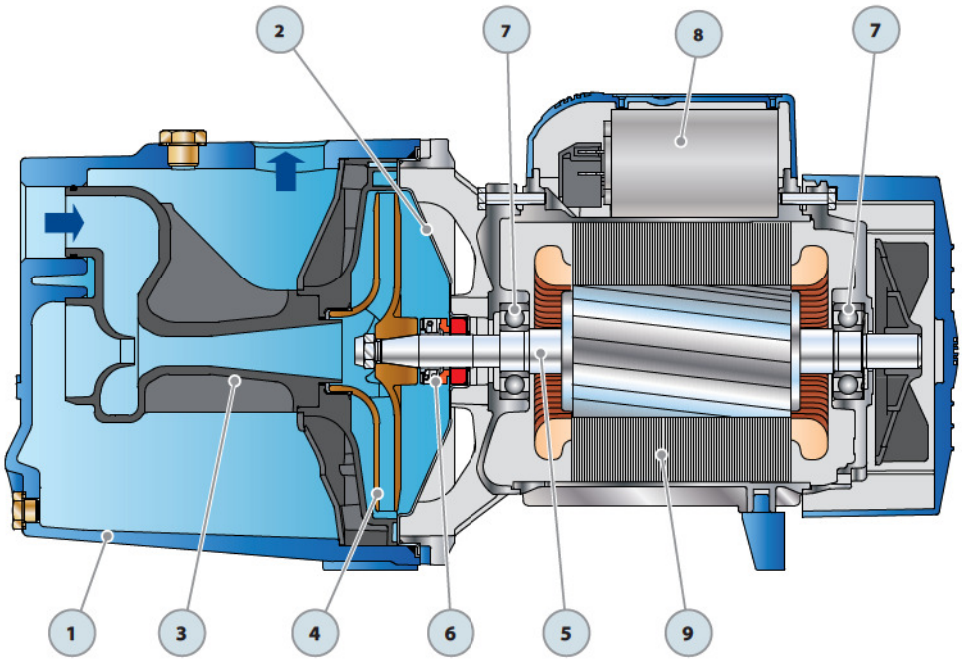

DIMENSIONS AND WEIGHT

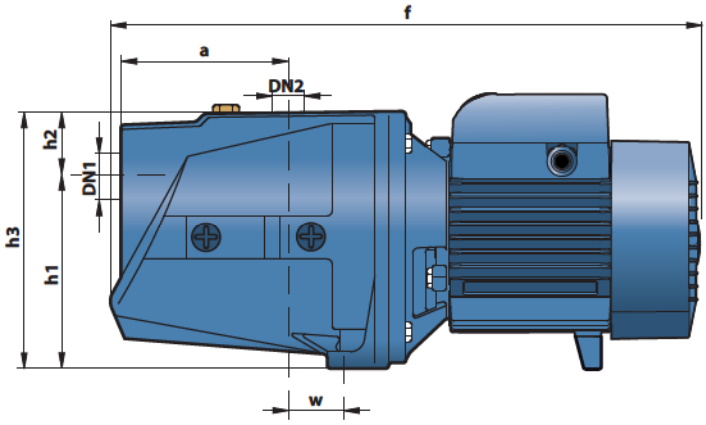

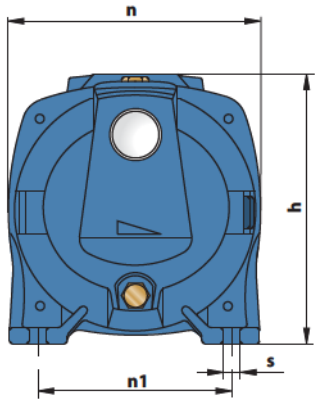

MODEL		PORTS		DIMENSIONS mm										kg	
Single-phase	Three-phase	DN1	DN2	a	f	h	h1	h2	h3	n	n1	w	s	1~	3~
JSWm 10H	JSW 10H	1"	1"	113.5	402	201	147	35	182	180	142	22	10	**13.7**	**13.8**
JSWm 12H	JSW 12H													**14.7**	**13.6**
JSWm 15H	JSW 15H													**15.1**	**14.8**
JSWm 10M	JSW 10M													**13.7**	**13.8**
JSWm 12M	JSW 12M													**14.7**	**13.6**
JSWm 15M	JSW 15M													**15.1**	**14.8**

ABSORPTION

MODEL	VOLTAGE (single-phase)		
Single-phase	230 V	240 V	110 V
JSWm 10H	**4.7** A	**4.5** A	**9.4** A
JSWm 12H	**5.4** A	**5.0** A	**10.8** A
JSWm 15H	**6.6** A	**6.0** A	**13.2** A
JSWm 10M	**5.0** A	**4.6** A	**10.0** A
JSWm 12M	**5.7** A	**5.2** A	**11.4** A
JSWm 15M	**6.6** A	**6.0** A	**13.2** A

MODEL	VOLTAGE (three-phase)					
Three-phase	230 V	400 V	690 V	240 V	415 V	720 V
JSW 10H	**3.5** A	**2.0** A	**1.2** A	**3.4** A	**2.0** A	**1.2** A
JSW 12H	**4.2** A	**2.4** A	**1.4** A	**4.0** A	**2.3** A	**1.3** A
JSW 15H	**5.5** A	**3.2** A	**1.8** A	**5.3** A	**3.1** A	**1.8** A
JSW 10M	**3.6** A	**2.1** A	**1.2** A	**3.5** A	**2.0** A	**1.2** A
JSW 12M	**4.5** A	**2.6** A	**1.5** A	**4.3** A	**2.5** A	**1.4** A
JSW 15M	**5.5** A	**3.2** A	**1.8** A	**5.3** A	**3.1** A	**1.8** A

PALLETIZATION

MODEL		GROUPAGE				CONTAINER			
		n°	H	kg		n°	H	kg	
Single-phase	Three-phase	pumps	(mm)	1~	3~	pumps	(mm)	1~	3~
JSWm 10H	JSW 10H	**72**	1460	1000	1010	**96**	1900	1330	1340
JSWm 12H	JSW 12H	**72**	1460	1080	1000	**96**	1900	1430	1330
JSWm 15H	JSW 15H	**72**	1460	1110	1090	**96**	1900	1470	1440
JSWm 10M	JSW 10M	**72**	1460	1000	1010	**96**	1900	1330	1340
JSWm 12M	JSW 12M	**72**	1460	1080	1000	**96**	1900	1430	1330
JSWm 15M	JSW 15M	**72**	1460	1110	1090	**96**	1900	1470	1440

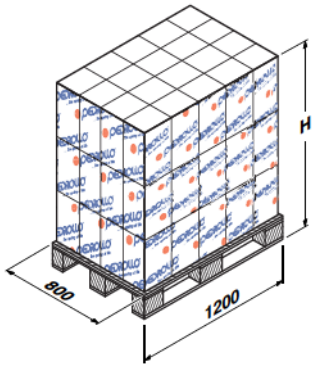

JSW3

Self-priming "JET" pumps

PERFORMANCE RANGE

- Flow rate up to **160 l/min** (9.6 m^3/h)
- Head up to **96** m

APPLICATION LIMITS

- Manometric suction lift up to **9 m** (HS)
- Liquid temperature between **-10 °C** and **+40 °C**
- Ambient temperature between **-10 °C** and **+40 °C**
- Max. working pressure **10 bar**
- Continuous service **S1**

CONSTRUCTION AND SAFETY STANDARDS

EN 60335-1
IEC 60335-1
CEI 61-150

EN 60034-1
IEC 60034-1
CEI 2-3

CERTIFICATIONS

АИЗО

УкрТЕСТ-003

INSTALLATION AND USE

Suitable for use with clean water and liquids that are not chemically aggressive towards the materials from which the pump is made. The self-priming JSW pumps are designed to pump water even in cases where air is present. As a result of their reliability and the fact that they are easy to use, they are recommended for use in domestic, civil and industrial applications such as the distribution of water in combination with pressure sets, and for the irrigation of gardens and allotments, etc.
The pump should be installed in an enclosed environment, or at least sheltered from inclement weather.

PATENTS - TRADE MARKS - MODELS

- Registered Italian model nº 72753

OPTIONALS AVAILABLE ON REQUEST

- Special mechanical seal
- Other voltages or 60 Hz frequency
- IP55 class protection

GUARANTEE

2 years subject to terms and conditions

CHARACTERISTIC CURVES AND PERFORMANCE DATA

50 Hz n= 2900 1/min HS= 0 m

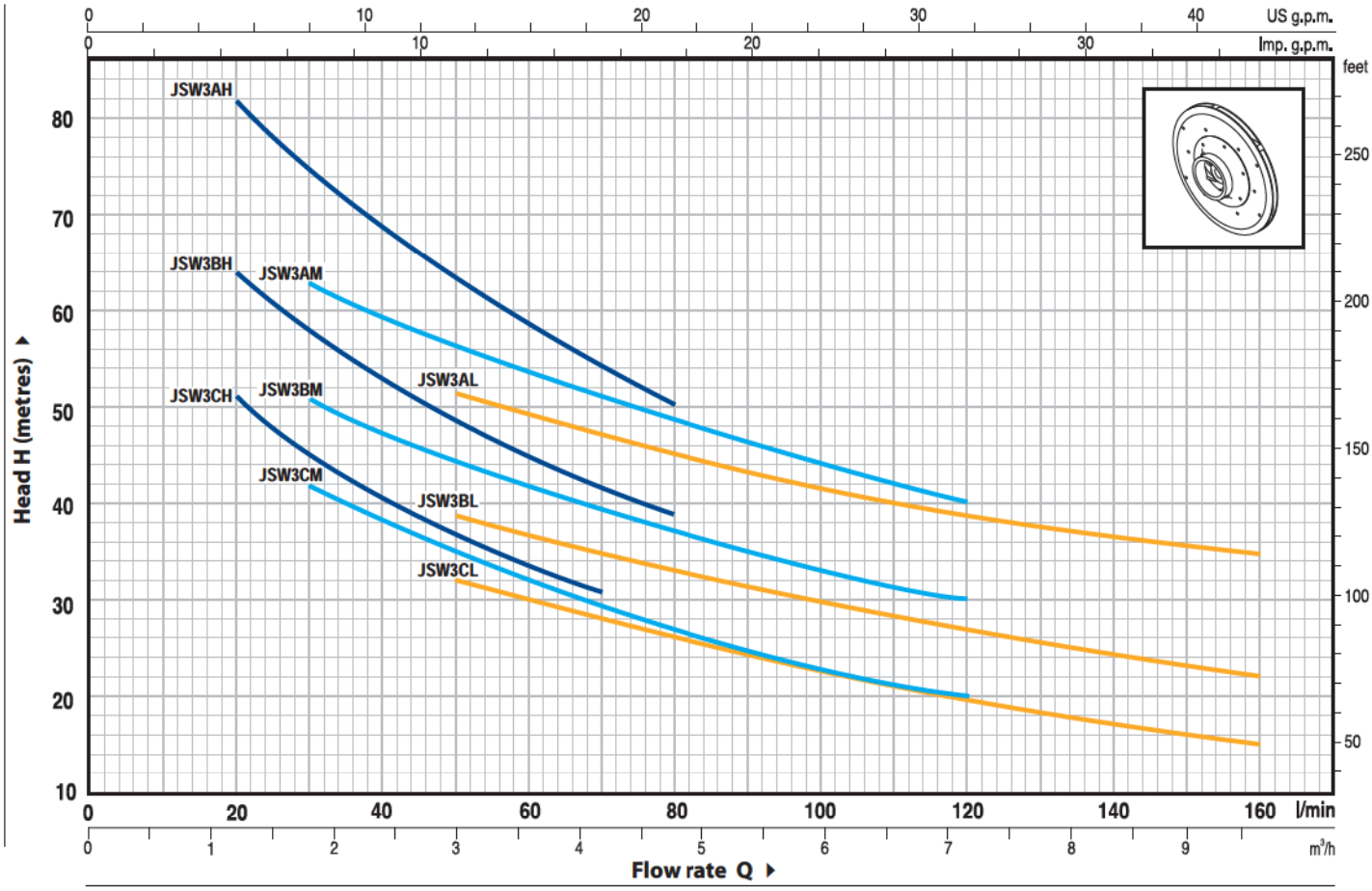

MODEL		POWER		Q m³/h	0	0.6	0.9	1.2	1.5	1.8	2.1	2.4	2.7	3.0	3.6	4.2	4.8	6.0	7.2	8.4	9.6
Single-phase	Three-phase	kW	HP	Q l/min	**0**	**10**	**15**	**20**	**25**	**30**	**35**	**40**	**45**	**50**	**60**	**70**	**80**	**100**	**120**	**140**	**160**
JSWm 3CH	**JSW 3CH**	1.1	1.5	H metres	64	60	55	51	48	45	42.5	40	39	37	34	31					
JSWm 3BH	**JSW 3BH**	1.5	2		76	70	67	64	61	58	55.5	53	51	49	45	41	39				
–	**JSW 3AH**	2.2	3		96	90	86	82	79	75	71.5	69	66	64	58	54	50				
JSWm 3CM	**JSW 3CM**	1.1	1.5		52	50	48	45	44	42	40	38	37	35	32	29	27	23	20		
JSWm 3BM	**JSW 3BM**	1.5	2		60	58	56	54	52	51	49	47	46	45	42	39	37	33	30		
–	**JSW 3AM**	2.2	3		74	70	68	67	65	63	61	59	58	56	54	51	49	44	40		
JSWm 3CL	**JSW 3CL**	1.1	1.5		42	40	39	38	37	36	35	34	33	32	30	28	26	23	20	17	15
JSWm 3BL	**JSW 3BL**	1.5	2		51	48	46	45	44	43	42	41	40	39	37	35	33	30	27	24	22
–	**JSW 3AL**	2.2	3		62	60	58	57	56	55	54	53	52	51	49	47	45	42	39	36.5	35

Q = Flow rate **H** = Total manometric head **HS** = Suction height

Tolerance of characteristic curves in compliance with EN ISO 9906 App. A.

INSTALLATION EXAMPLE

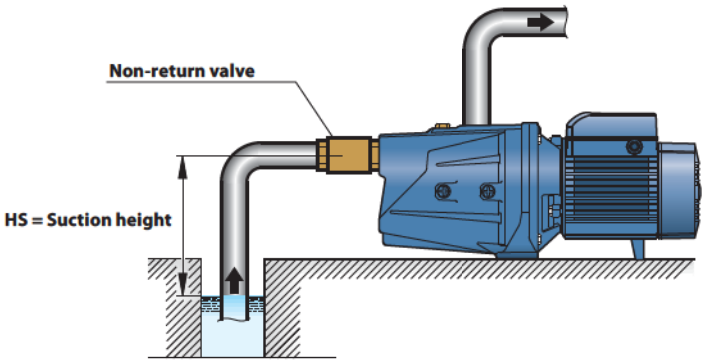

POS.	COMPONENT	CONSTRUCTION CHARACTERISTICS
1	**PUMP BODY**	Cast iron, complete with threaded ports in compliance with ISO 228/1
2	**BODY BACKPLATE**	Cast iron
3	**NOZZLE ASSEMBLY**	Noryl GFN2V
4	**IMPELLER**	Brass
5	**MOTOR SHAFT**	Stainless steel EN 10088-3 - 1.4104

6 MECHANICAL SEAL

Seal	*Shaft*	*Materials*		
Model	***Diameter***	*Stationary ring*	*Rotational ring*	*Elastomer*
FN-18	**Ø 18** mm	Graphite	Ceramic	NBR

7 BEARINGS **6204 ZZ / 6204 ZZ**

8 CAPACITOR

Pump	*Capacitance*	
Single-phase	***(230 V or 240 V)***	***(110 V)***
JSWm 3C	**31.5** µF 450 VL	**60** µF 250 VL
JSWm 3B	**45** µF 450 VL	**80** µF 250 VL

9 ELECTRIC MOTOR

JSWm: single-phase 230 V - 50 Hz with thermal overload protector built-in to the winding.
JSW: three-phase 230/400 V - 50 Hz.

➡ **Pumps fitted with the three-phase motor option offer IE2 (IEC 60034-30) class high performance**

– Insulation: F class.
– Protection: IP 44.

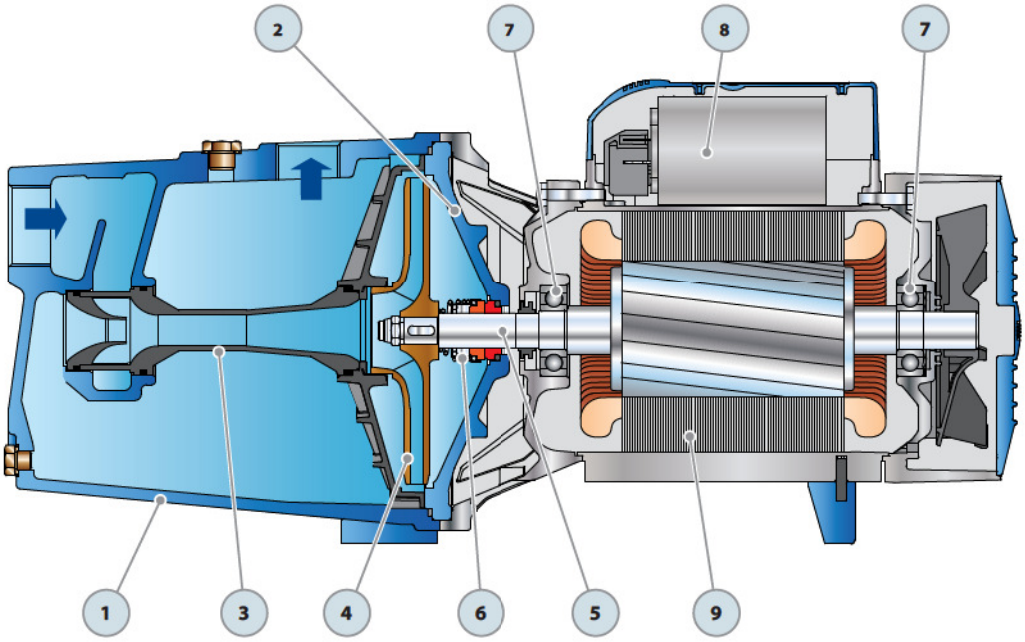

DIMENSIONS AND WEIGHT

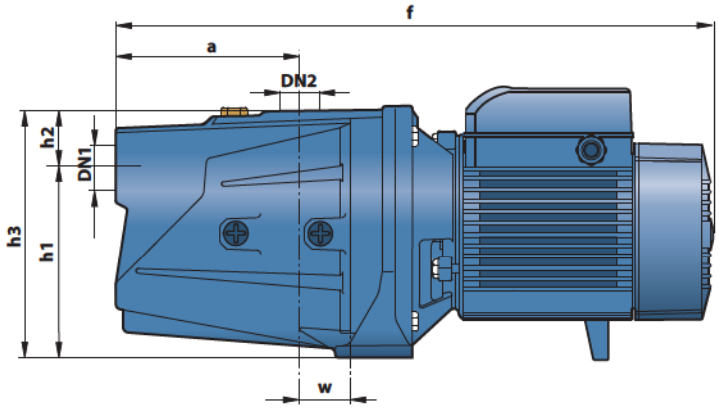

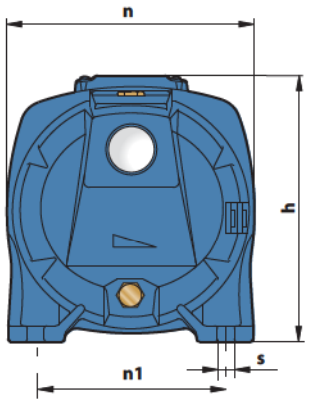

MODEL		PORTS		DIMENSIONS mm										kg	
Single-phase	Three-phase	DN1	DN2	a	f	h	h1	h2	h3	n	n1	w	s	1~	3~
JSWm 3CH	JSW 3CH													**24.9**	**22.9**
JSWm 3BH	JSW 3BH													**26.1**	**25.1**
–	JSW 3AH													**–**	**26.4**
JSWm 3CM	JSW 3CM													**24.9**	**22.9**
JSWm 3BM	JSW 3BM	**1¼"**	**1"**	155	530	242	165	43	208	206	164	30	11	**26.1**	**25.1**
–	JSW 3AM													**–**	**26.4**
JSWm 3CL	JSW 3CL													**24.9**	**22.9**
JSWm 3BL	JSW 3BL													**26.1**	**25.1**
–	JSW 3AL													**–**	**26.4**

ABSORPTION

MODEL	VOLTAGE (single-phase)		
Single-phase	230 V	240 V	110 V
JSWm 3CH	**8.0** A	**7.3** A	**16.0** A
JSWm 3BH	**9.0** A	**8.2** A	**18.0** A
JSWm 3CM	**7.9** A	**7.2** A	**15.8** A
JSWm 3BM	**9.3** A	**8.5** A	**18.6** A
JSWm 3CL	**7.5** A	**6.9** A	**15.0** A
JSWm 3BL	**9.7** A	**9.0** A	**19.4** A

MODEL	VOLTAGE (three-phase)					
Three-phase	230 V	400 V	690 V	240 V	415 V	720 V
JSW 3CH	**5.5** A	**3.2** A	**1.8** A	**5.3** A	**3.1** A	**1.8** A
JSW 3BH	**6.9** A	**4.0** A	**2.3** A	**6.6** A	**3.8** A	**2.2** A
JSW 3AH	**9.0** A	**5.2** A	**3.0** A	**8.6** A	**5.0** A	**2.9** A
JSW 3CM	**5.9** A	**3.4** A	**2.0** A	**5.7** A	**3.3** A	**1.9** A
JSW 3BM	**7.3** A	**4.2** A	**2.4** A	**7.0** A	**4.0** A	**2.3** A
JSW 3AM	**9.5** A	**5.5** A	**3.2** A	**9.1** A	**5.3** A	**3.1** A
JSW 3CL	**5.5** A	**3.2** A	**1.8** A	**5.3** A	**3.1** A	**1.8** A
JSW 3BL	**7.3** A	**4.2** A	**2.4** A	**7.0** A	**4.0** A	**2.3** A
JSW 3AL	**9.0** A	**5.2** A	**3.0** A	**8.6** A	**5.0** A	**2.9** A

PALLETIZATION

MODEL		GROUPAGE				CONTAINER			
		n°	H	kg		n°	H	kg	
Single-phase	Three-phase	pumps	(mm)	1~	3~	pumps	(mm)	1~	3~
JSWm 3CH	JSW 3CH	**35**	1420	890	820	**49**	1930	1240	1140
JSWm 3BH	JSW 3BH	**35**	1420	930	900	**49**	1930	1300	1250
–	JSW 3AH	**35**	1420	–	941	**49**	1930	–	1310
JSWm 3CM	JSW 3CM	**35**	1420	890	820	**49**	1930	1240	1140
JSWm 3BM	JSW 3BM	**35**	1420	930	900	**49**	1930	1300	1250
–	JSW 3AM	**35**	1420	–	941	**49**	1930	–	1310
JSWm 3CL	JSW 3CL	**35**	1420	890	820	**49**	1930	1240	1140
JSWm 3BL	JSW 3BL	**35**	1420	930	900	**49**	1930	1300	1250
–	JSW 3AL	**35**	1420	–	941	**49**	1930	–	1310

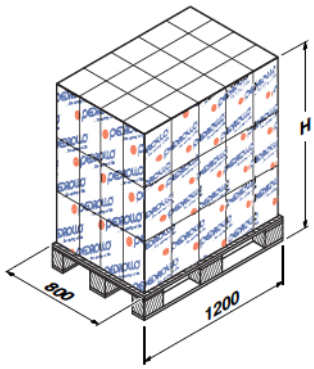

JCR

Self-priming "JET" pumps

PERFORMANCE RANGE

- Flow rate up to **80 l/min** (4.8 m^3/h)
- Head up to **72 m**

APPLICATION LIMITS

- Manometric suction lift up to **9 m** (HS)
- Liquid temperature between **-10 °C** and **+40 °C**
- Ambient temperature up to **+40 °C**
- Max. working pressure **6.5 bar**
- Continuous service **S1**

CONSTRUCTION AND SAFETY STANDARDS

EN 60335-1	**EN 60034-1**
IEC 60335-1	**IEC 60034-1**
CEI 61-150	**CEI 2-3**

CERTIFICATIONS

АИЗО

УкрТЕСТ-003

INSTALLATION AND USE

Suitable for use with clean water and liquids that are not chemically aggressive towards the materials from which the pump is made. The self-priming JCR pumps are designed to pump water even in cases where air is present. As a result of their reliability and the fact that they are easy to use, they are recommended for use in domestic applications such as the distribution of water in combination with small or medium sized pressure sets, and for the irrigation of gardens and allotments, etc.
The pump should be installed in an enclosed environment, or at least sheltered from inclement weather.

PATENTS - TRADE MARKS - MODELS

- European Patent n° 1 510 696

OPTIONALS AVAILABLE ON REQUEST

- Other voltages or 60 Hz frequency

GUARANTEE

2 years subject to terms and conditions

CHARACTERISTIC CURVES AND PERFORMANCE DATA

50 Hz n= 2900 1/min HS= 0 m

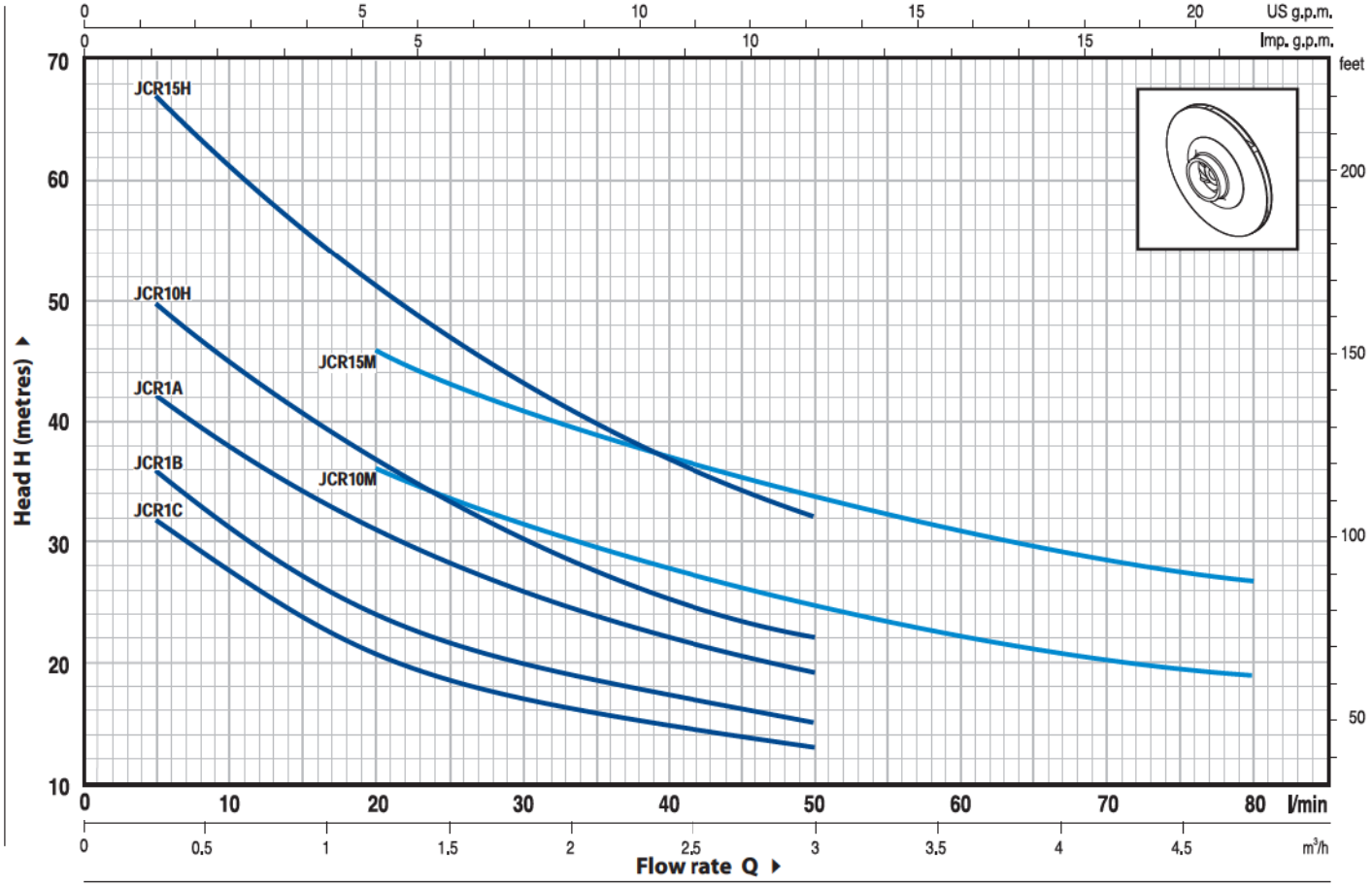

MODEL		POWER		Q m³/h	0	0.3	0.6	0.9	1.2	1.5	1.8	2.1	2.4	3.0	3.6	4.2	4.8
Single-phase	Three-phase	kW	HP	l/min	**0**	**5**	**10**	**15**	**20**	**25**	**30**	**35**	**40**	**50**	**60**	**70**	**80**
JCRm 1C	–	0.37	0.50		35	32	27	24	21	19	17	16	15	13			
JCRm 1B	**JCR 1B**	0.50	0.70		41	36	31	27	24	22	20	19	17	15			
JCRm 1A	**JCR 1A**	0.60	0.85		47	42	38	34	31	28.5	26	24	22	19			
JCRm 10H	**JCR 10H**	0.75	1	**H** metres	56	50	45	41	37	33	30	27	25	22			
JCRm 15H	**JCR 15H**	1.1	1.5		72	67	61	56	51	47	43	40	37	32			
JCRm 10M	**JCR 10M**	0.75	1		46	44	41	39	37	35	32	30	28	25	22	21	19
JCRm 15M	**JCR 15M**	1.1	1.5		55	53	50	48	46	43	41	39	37	34	31	29	27

Q = Flow rate **H** = Total manometric head **HS** = Suction height

Tolerance of characteristic curves in compliance with EN ISO 9906 App. A.

INSTALLATION EXAMPLE

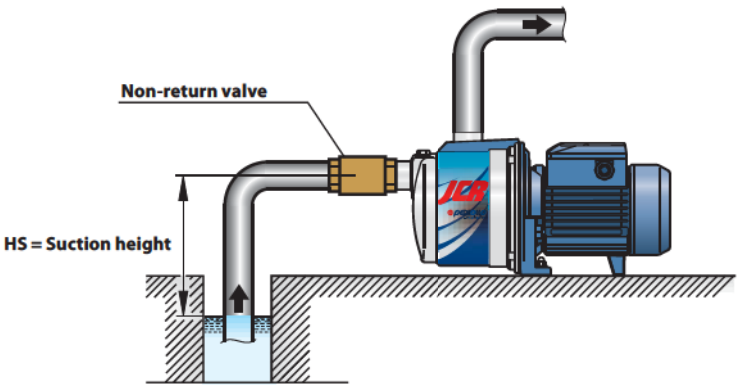

POS.	COMPONENT	CONSTRUCTION CHARACTERISTICS
1	**PUMP BODY**	Stainless steel AISI 304, complete with threaded ports in compliance with ISO 228/1
2	**BODY BACKPLATE**	Stainless steel AISI 304
3	**NOZZLE ASSEMBLY**	Noryl GFN2V
4	**IMPELLER**	Noryl GFN2V
5	**MOTOR SHAFT**	Stainless steel EN 10088-3 - 1.4104

6 MECHANICAL SEAL

Pump	*Seal*	*Shaft*	*Materials*		
Model	*Model*	*Diameter*	*Stationary ring*	*Rotational ring*	*Elastomer*
JCR 1C-B-A	**AR-12**	**Ø 12** mm	Ceramic	Graphite	NBR
JCR 10-15	**AR-14**	**Ø 14** mm	Ceramic	Graphite	NBR

7 BEARINGS

Pump	*Model*
JCR 1C-B-A	**6201 ZZ / 6201 ZZ**
JCR 10H-M / 15H-M	**6203 ZZ / 6203 ZZ**

8 CAPACITOR

Pump	*Capacitance*	
Single-phase	*(230 V or 240 V)*	*(110 V)*
JCRm 1C	**10** µF 450 VL	**25** µF 250 VL
JCRm 1B	**10** µF 450 VL	**30** µF 250 VL
JCRm 1A	**14** µF 450 VL	**30** µF 250 VL
JCRm 10H-M	**20** µF 450 VL	**60** µF 300 VL
JCRm 15H-M	**25** µF 450 VL	**60** µF 300 VL

9 ELECTRIC MOTOR

JCRm: single-phase 230 V - 50 Hz with thermal overload protector built-in to the winding.
JCR: three-phase 230/400 V - 50 Hz.

➡ **Pumps fitted with the three-phase motor option offer IE2 (IEC 60034-30) class high performance**

– Insulation: F class.
– Protection: IP 44.

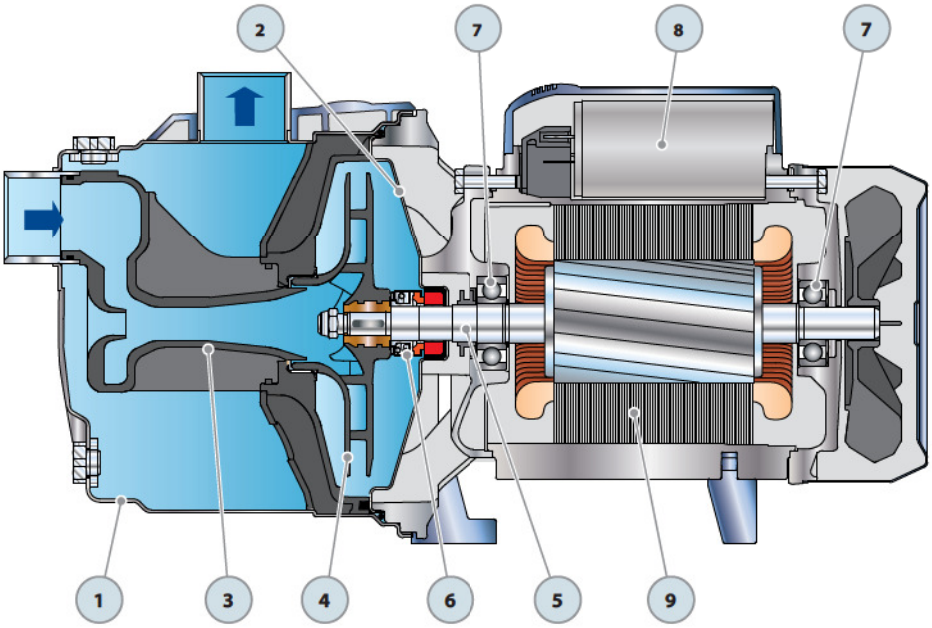

DIMENSIONS AND WEIGHT

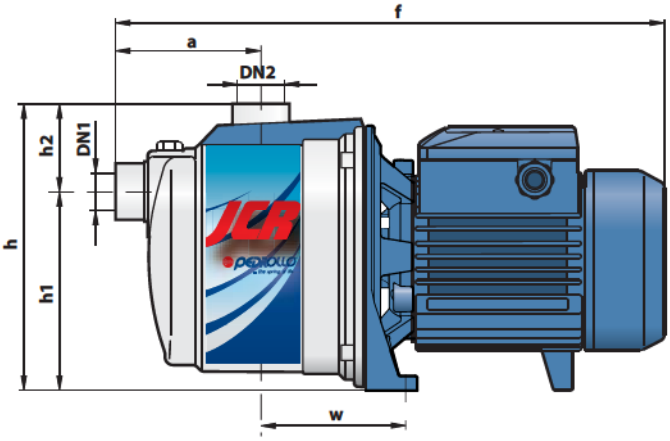

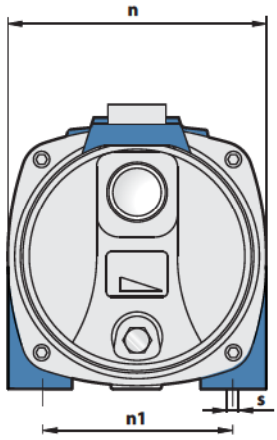

MODEL		PORTS		DIMENSIONS mm									kg	
Single-phase	Three-phase	DN1	DN2	a	f	h	h1	h2	n	n1	w	s	1~	3~
JCRm 1C	–												**5.6**	**–**
JCRm 1B	JCR 1B	**1"**	**1"**	90	345	174	122	52	160	120	88	9	**6.4**	**6.3**
JCRm 1A	JCR 1A												**6.9**	**6.4**
JCRm 10H-M	JCR 10H-M	**1¼"**	**1"**	117	406	206	145	55	184	135	110	10	**9.4**	**9.3**
JCRm 15H-M	JCR 15H-M												**10.5**	**10.3**

ABSORPTION

MODEL	VOLTAGE (single-phase)		
Single-phase	230 V	240 V	110 V
JCRm 1C	**2.4** A	**2.2** A	**4.8** A
JCRm 1B	**3.2** A	**2.9** A	**6.5** A
JCRm 1A	**3.6** A	**3.3** A	**7.3** A
JCRm 10H	**4.7** A	**4.5** A	**9.4** A
JCRm 15H	**6.6** A	**6.0** A	**13.2** A
JCRm 10M	**5.0** A	**4.6** A	**10.0** A
JCRm 15M	**6.6** A	**6.0** A	**13.2** A

MODEL	VOLTAGE (three-phase)					
Three-phase	230 V	400 V	690 V	240 V	415 V	720 V
JCR 1B	**2.1** A	**1.2** A	**0.7** A	**2.0** A	**1.2** A	**0.7** A
JCR 1A	**2.8** A	**1.6** A	**0.9** A	**2.7** A	**1.6** A	**0.9** A
JCR 10H	**3.5** A	**2.0** A	**1.2** A	**3.4** A	**2.0** A	**1.2** A
JCR 15H	**5.5** A	**3.2** A	**1.8** A	**5.3** A	**3.1** A	**1.8** A
JCR 10M	**3.6** A	**2.1** A	**1.2** A	**3.5** A	**2.0** A	**1.2** A
JCR 15M	**5.5** A	**3.2** A	**1.8** A	**5.3** A	**3.1** A	**1.8** A

PALLETIZATION

MODEL		GROUPAGE				CONTAINER			
		n°	H	kg		n°	H	kg	
Single-phase	Three-phase	pumps	(mm)	1~	3~	pumps	(mm)	1~	3~
JCRm 1C	–	**98**	1440	570	–	**154**	2180	880	–
JCRm 1B	JCR 1B	**98**	1440	650	640	**154**	2180	1010	990
JCRm 1A	JCR 1A	**98**	1440	700	650	**154**	2180	1080	1010
JCRm 10H-M	JCR 10H-M	**72**	1460	700	690	**96**	1900	920	910
JCRm 15H-M	JCR 15H-M	**72**	1460	780	760	**96**	1900	1030	1010

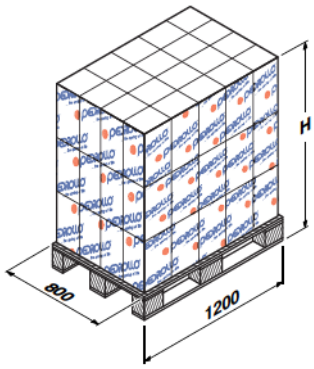

PLURIJET 80-100

Self-priming multi-stage pumps

PERFORMANCE RANGE

- Flow rate up to **130 l/min** (7.8 m^3/h)
- Head up to **50 m**

APPLICATION LIMITS

- Manometric suction lift up to **9 m** (HS)
- Liquid temperature between **-10 °C** and **+40 °C**
- Ambient temperature up to **+40 °C**
- Max. working pressure **6 bar**
- Continuous service **S1**

CONSTRUCTION AND SAFETY STANDARDS

EN 60335-1
IEC 60335-1
CEI 61-150

EN 60034-1
IEC 60034-1
CEI 2-3

CERTIFICATIONS

АИЗО

УкрТЕСТ-003

INSTALLATION AND USE

Suitable for use with clean water even where air is present and with liquids that are not chemically aggressive towards the materials from which the pump is made.
The self-priming "PLURIJET" pumps are designed to pump water even in cases where air is present. As a result of their quietness, reliability and low energy consumption they are recommended for use in domestic and civil applications such as the pressurisation and distribution of water in combination with pressure sets, and in rain water recovery and irrigation systems, etc.
The pump should be installed in an enclosed environment, or at least sheltered from inclement weather.

PATENTS - TRADE MARKS - MODELS

- PLURIJET® is a registered trade mark
- Registered Community Design n° 342159-0006

OPTIONALS AVAILABLE ON REQUEST

- Other voltages or 60 Hz frequency

GUARANTEE

2 years subject to terms and conditions

CHARACTERISTIC CURVES AND PERFORMANCE DATA

50 Hz n= 2900 1/min HS= 0 m

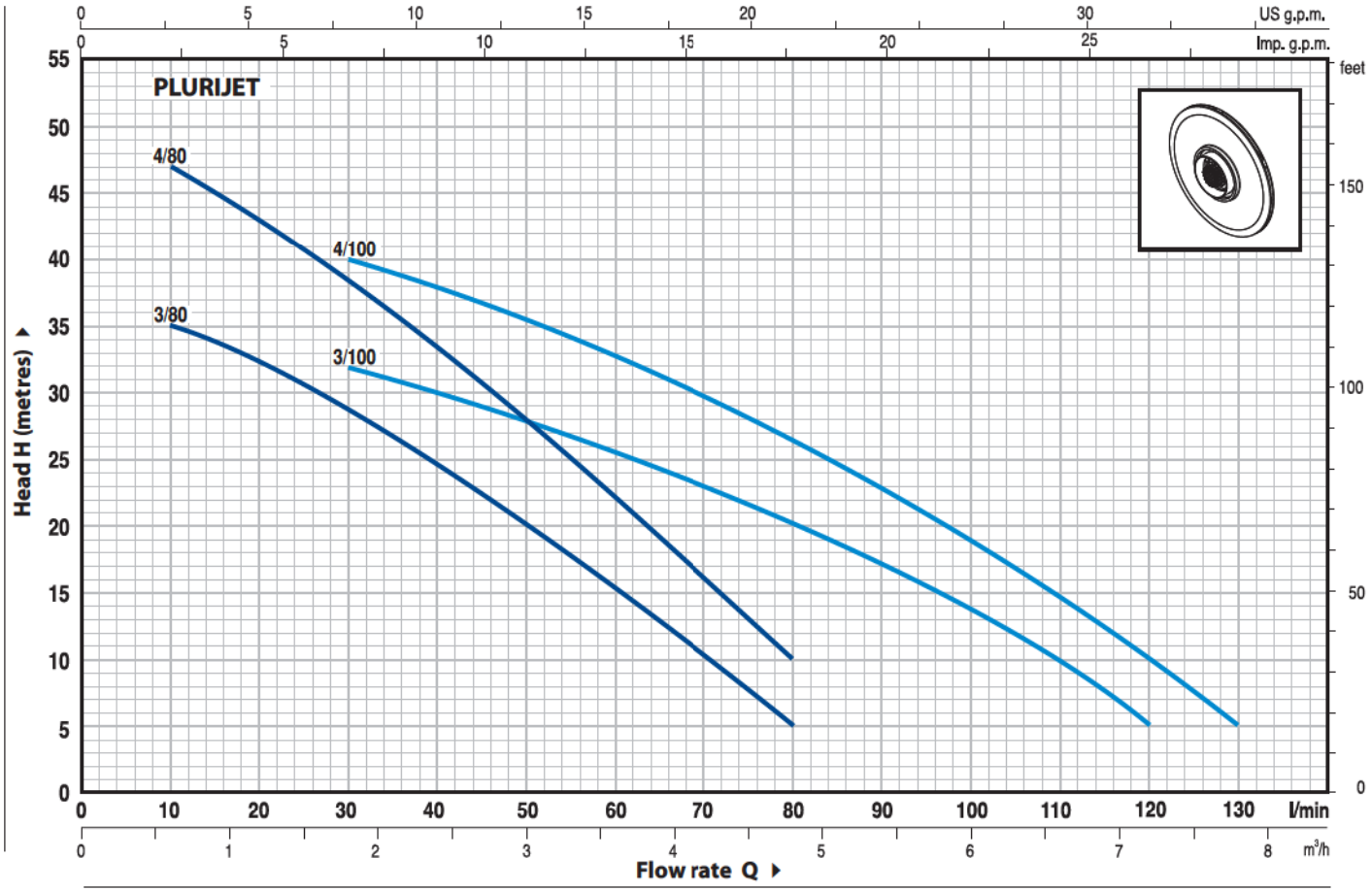

MODEL		POWER		Q m³/h	0	0.3	0.6	1.2	1.8	2.4	3.0	3.6	4.2	4.8	6.0	7.2	7.8
Single-phase	Three-phase	kW	HP	Q l/min	**0**	**5**	**10**	**20**	**30**	**40**	**50**	**60**	**70**	**80**	**100**	**120**	**130**
PLURIJETm 3/80	–	0.45	0.60	H metres	38	36	35	33.5	29	25	20	15.5	10.5	5			
PLURIJETm 4/80	**PLURIJET 4/80**	0.60	0.85		50	48	47	43	38.5	33.5	28	22.5	16	10			
PLURIJETm 3/100	**PLURIJET 3/100**	0.60	0.85		36	35.5	35	33.5	32	30	28	26	23	20	13.5	5	
PLURIJETm 4/100	**PLURIJET 4/100**	0.75	1		46	45	44	42	40	38	35.5	33	30	26.5	19	10	5

Q = Flow rate **H** = Total manometric head **HS** = Suction height

Tolerance of characteristic curves in compliance with EN ISO 9906 App. A.

INSTALLATION EXAMPLE

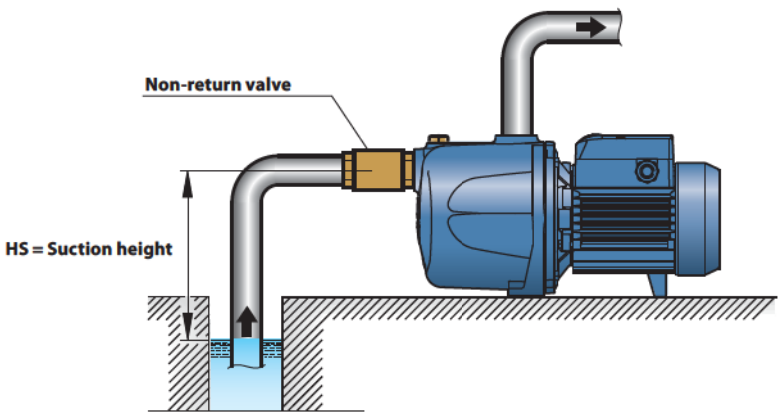

PLURIJET 80-100

POS.	COMPONENT	CONSTRUCTION CHARACTERISTICS
1	PUMP BODY	Cast iron, complete with threaded ports in compliance with ISO 228/1
2	BODY BACKPLATE	Stainless steel AISI 304
3	IMPELLERS	Noryl GFN2V
4	MOTOR SHAFT	Stainless steel EN 10088-3 - 1.4104

5 MECHANICAL SEAL

Seal	*Shaft*	*Materials*		
Model	*Diameter*	*Stationary ring*	*Rotational ring*	*Elastomer*
AR-13	**Ø 13** mm	Ceramic	Graphite	NBR

6 BEARINGS

Pump	*Model*
PLURIJET 3/80 **PLURIJET 3/100** **PLURIJET 4/80**	**6202 ZZ - C3 / 6201 ZZ**
PLURIJET 4/100	**6203 ZZ / 6203 ZZ**

7 CAPACITOR

Pump	*Capacitance*	
Single-phase	*(230 V or 240 V)*	*(110 V)*
PLURIJETm 3/80	**12.5** µF 450 VL	**30** µF 250 VL
PLURIJETm 4/80 **PLURIJETm 3/100**	**14** µF 450 VL	**30** µF 250 VL
PLURIJETm 4/100	**20** µF 450 VL	**60** µF 300 VL

8 ELECTRIC MOTOR

PLURIJETm: single-phase 230 V - 50 Hz with thermal overload protector built-in to the winding.
PLURIJET: three-phase 230/400 V - 50 Hz.

➡ **Pumps fitted with the three-phase motor option offer IE2 (IEC 60034-30) class high performance**

– Insulation: F class.
– Protection: IP 44.

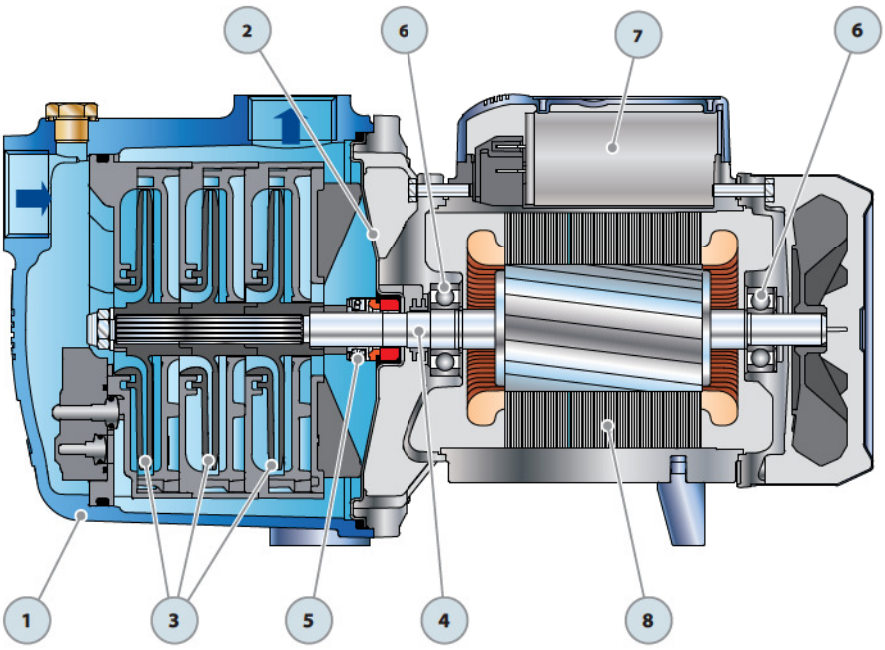

DIMENSIONS AND WEIGHT

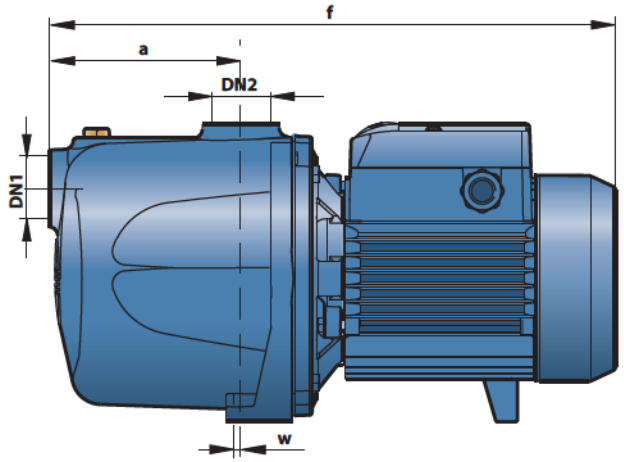

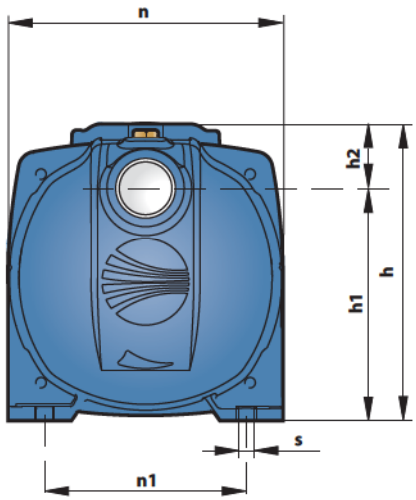

MODEL		PORTS		DIMENSIONS mm									kg	
Single-phase	Three-phase	DN1	DN2	a	f	h	h1	h2	n	n1	w	s	1~	3~
PLURIJETm 3/80	–	1"	1"	110	334	172	134	38	158	116	2	9	**10.0**	–
PLURIJETm 4/80	PLURIJET 4/80			135	357								**11.3**	**10.7**
PLURIJETm 3/100	PLURIJET 3/100			110	334								**10.5**	**10.0**
PLURIJETm 4/100	PLURIJET 4/100			135	378	191		61					**13.7**	**12.7**

ABSORPTION

MODEL	VOLTAGE (single-phase)		
Single-phase	230 V	240 V	110 V
PLURIJETm 3/80	**3.4** A	**3.3** A	**6.8** A
PLURIJETm 4/80	**4.3** A	**4.2** A	**8.6** A
PLURIJETm 3/100	**4.1** A	**4.0** A	**8.2** A
PLURIJETm 4/100	**6.0** A	**5.8** A	**12.0** A

MODEL	VOLTAGE (three-phase)					
Three-phase	230 V	400 V	690 V	240 V	415 V	720 V
PLURIJET 4/80	**3.4** A	**2.0** A	**1.1** A	**3.3** A	**1.9** A	**1.1** A
PLURIJET 3/100	**3.1** A	**1.8** A	**1.0** A	**3.0** A	**1.7** A	**1.0** A
PLURIJET 4/100	**4.5** A	**2.6** A	**1.5** A	**4.3** A	**2.5** A	**1.4** A

PALLETIZATION

MODEL		GROUPAGE				CONTAINER			
		n°	H	kg		n°	H	kg	
Single-phase	Three-phase	pumps	(mm)	1~	3~	pumps	(mm)	1~	3~
PLURIJETm 3/80	–	**98**	1440	980	–	**154**	2180	1560	–
PLURIJETm 4/80	PLURIJET 4/80	**98**	1440	1130	1070	**154**	2180	1760	1670
PLURIJETm 3/100	PLURIJET 3/100	**98**	1440	1050	1000	**154**	2180	1640	1560
PLURIJETm 4/100	PLURIJET 4/100	**98**	1540	1360	1260	**140**	2140	1940	1800

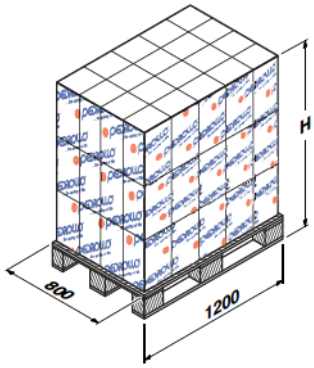

PLURIJET 90-130-200

Self-priming multi-stage pumps

PERFORMANCE RANGE

- Flow rate up to **200 l/min** (12 m^3/h)
- Head up to **97 m**

APPLICATION LIMITS

- Manometric suction lift up to **9 m** (HS)
- Liquid temperature between **-10 °C** and **+40 °C**
- Ambient temperature up to **+40 °C**
- Max. working pressure **10 bar**
- Continuous service **S1**

CONSTRUCTION AND SAFETY STANDARDS

EN 60335-1
IEC 60335-1
CEI 61-150

EN 60034-1
IEC 60034-1
CEI 2-3

CERTIFICATIONS

АИЗО

УкрТЕСТ-003

INSTALLATION AND USE

Suitable for use with clean water even where air is present and with liquids that are not chemically aggressive towards the materials from which the pump is made.
The self-priming "PLURIJET" pumps are designed to pump water even in cases where air is present. As a result of their quietness, reliability and low energy consumption they are recommended for use in domestic and civil applications such as the pressurisation and distribution of water in combination with pressure sets, and in rain water recovery and irrigation systems, etc.
The pump should be installed in an enclosed environment, or at least sheltered from inclement weather.

PATENTS - TRADE MARKS - MODELS

- PLURIJET® is a registered trade mark
- Registered Community Design n° 342159-0007

OPTIONALS AVAILABLE ON REQUEST

- Other voltages or 60 Hz frequency
- IP55 class protection

GUARANTEE

2 years subject to terms and conditions

CHARACTERISTIC CURVES AND PERFORMANCE DATA

50 Hz n= 2900 1/min HS= 0 m

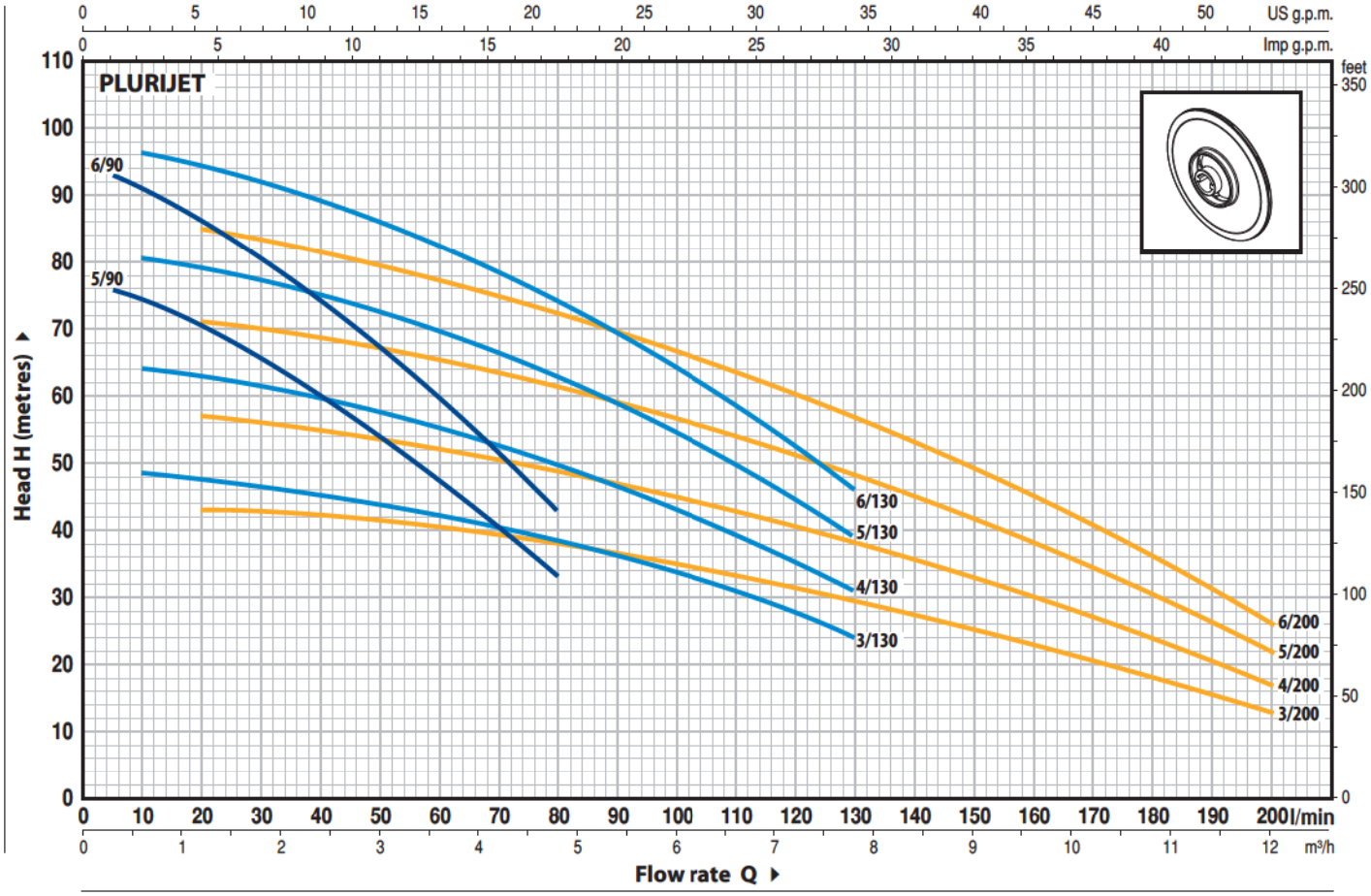

MODEL		POWER		Q m³/h	0	0.3	0.6	1.2	2.4	3.6	4.8	6.0	7.8	8.4	9.6	10.8	12.0
Single-phase	Three-phase	kW	HP	l/min	**0**	**5**	**10**	**20**	**40**	**60**	**80**	**100**	**130**	**140**	**160**	**180**	**200**
PLURIJETm 5/90	**PLURIJET 5/90**	1.1	1.5	H metres	76	76	73.5	70	60.5	47	33						
PLURIJETm 6/90	**PLURIJET 6/90**	1.5	2		93	93	90.5	86	74.5	59.5	43						
PLURIJETm 3/130	**PLURIJET 3/130**	1.1	1.5		49	49	48.5	47.5	45	42.5	38.5	33.5	24				
PLURIJETm 4/130	**PLURIJET 4/130**	1.5	2		65	65	64	63	60	56	50	43	31				
–	**PLURIJET 5/130**	1.8	2.5		81	81	80.5	79	75	70	62.5	54	39				
–	**PLURIJET 6/130**	2.2	3		97	97	96.5	94.5	90	83	74.5	64	46				
PLURIJETm 3/200	**PLURIJET 3/200**	1.1	1.5		44	43.5	43.5	43	42	40.5	38	35	29	27.5	23	18	13
PLURIJETm 4/200	**PLURIJET 4/200**	1.5	2		58	57.5	57.5	57	55	52.5	49.5	45	38	35.5	30	24	17
–	**PLURIJET 5/200**	1.8	2.5		73	72	71.5	71	69	65.5	62	56.5	48	44.5	38	30	22
–	**PLURIJET 6/200**	2.2	3		87	86	85.5	85	82	78	73	67	57	53	45	36	26

Q = Flow rate **H** = Total manometric head **HS** = Suction height

Tolerance of characteristic curves in compliance with EN ISO 9906 App. A.

INSTALLATION EXAMPLE

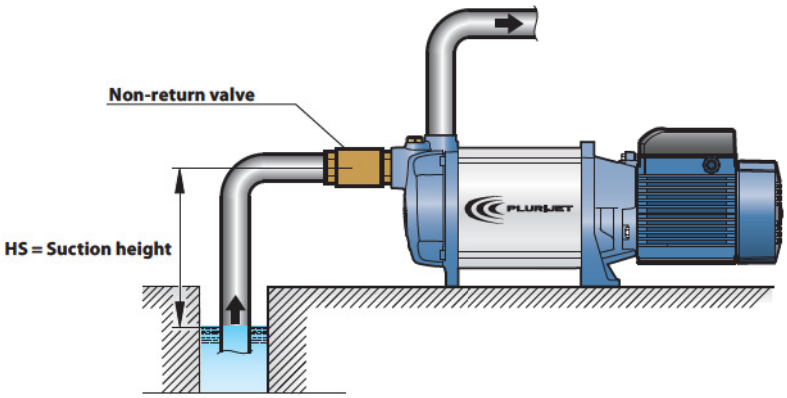

PLURIJET 90-130-200

POS.	COMPONENT	CONSTRUCTION CHARACTERISTICS
1	PUMP BODY	Cast iron and stainless steel AISI 304, complete with threaded ports in compliance with ISO 228/1
2	BODY BACKPLATE	Cast iron
3	IMPELLERS	Noryl GFN2V
4	DIFFUSERS	Stainless steel AISI 304, complete with anti-wear ring
5	MOTOR SHAFT	Stainless steel EN 10088-3 - 1.4104

6 MECHANICAL SEAL

Seal	*Shaft*	*Materials*		
Model	*Diameter*	*Stationary ring*	*Rotational ring*	*Elastomer*
FN-18	**Ø 18** mm	Graphite	Ceramic	NBR

7 BEARINGS **6206 ZZ - C3 / 6204 ZZ**

8 CAPACITOR

Pump	*Capacitance*	
Single-phase	*(230 V or 240 V)*	*(110 V)*
PLURIJETm 5/90 **PLURIJETm 3/130** **PLURIJETm 3/200**	**31.5** µF 450 VL	**60** µF 250 VL
PLURIJETm 6/90 **PLURIJETm 4/130** **PLURIJETm 4/200**	**45** µF 450 VL	**80** µF 250 VL

9 ELECTRIC MOTOR

PLURIJETm: single-phase 230 V - 50 Hz with thermal overload protector built-in to the winding.
PLURIJET: three-phase 230/400 V - 50 Hz.

➠ **Pumps fitted with the three-phase motor option offer IE2 (IEC 60034-30) class high performance**

– Insulation: F class.
– Protection: IP 44.

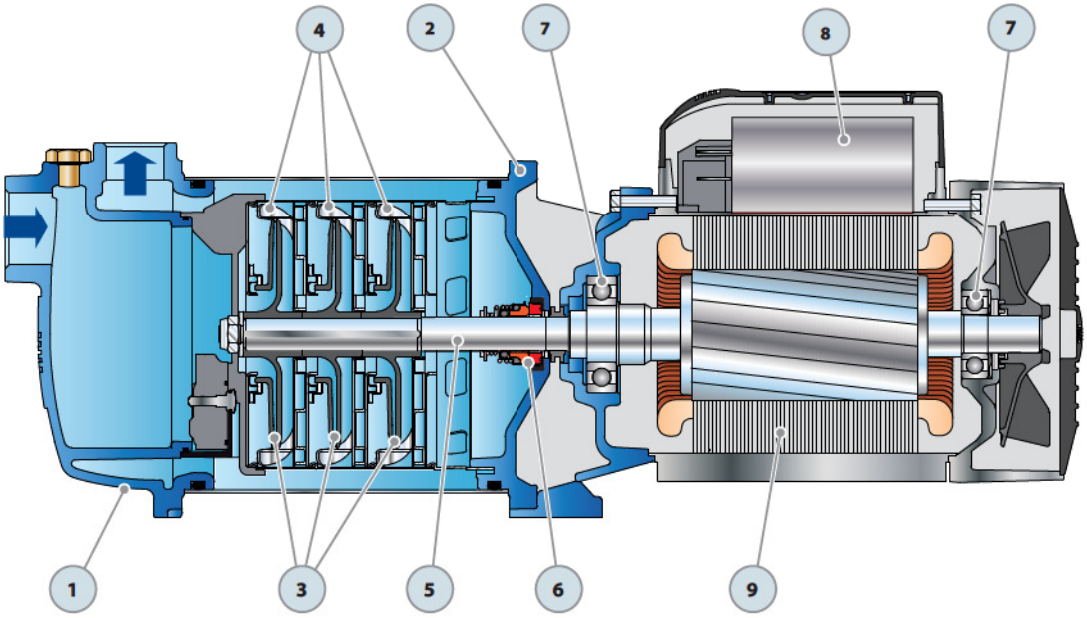

DIMENSIONS AND WEIGHT

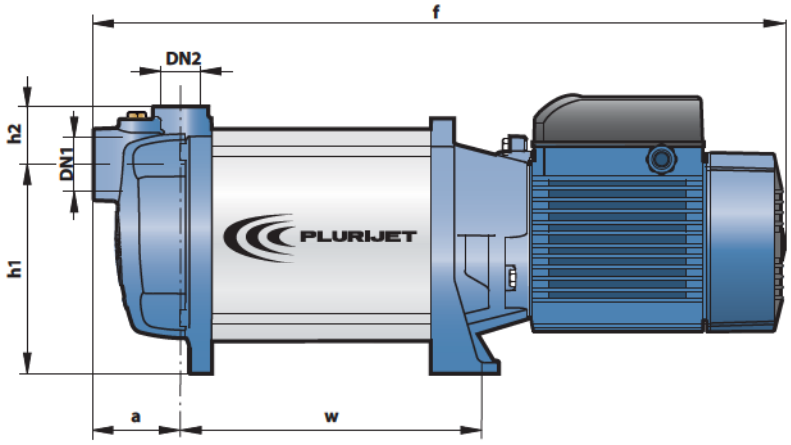

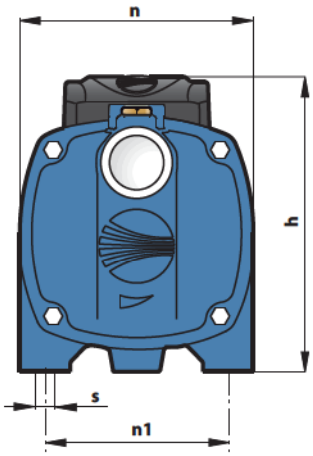

MODEL		PORTS		DIMENSIONS mm									kg	
Single-phase	Three-phase	DN1	DN2	a	f	h	h1	h2	n	n1	w	s	1~	3~
PLURIJETm 5/90	PLURIJET 5/90	1¼"	1"	69	634	230	153	46	185	145	304	10	**26.6**	**24.8**
PLURIJETm 6/90	PLURIJET 6/90				665						335		**28.7**	**27.8**
PLURIJETm 3/130	PLURIJET 3/130				571						241		**24.8**	**22.9**
PLURIJETm 4/130	PLURIJET 4/130				602						272		**26.9**	**25.9**
–	PLURIJET 5/130				634						304		–	**27.9**
–	PLURIJET 6/130				665						335		–	**28.8**
PLURIJETm 3/200	PLURIJET 3/200				571						241		**24.8**	**22.9**
PLURIJETm 4/200	PLURIJET 4/200				602						272		**26.9**	**25.9**
–	PLURIJET 5/200				634						304		–	**27.9**
–	PLURIJET 6/200				665						335		–	**28.8**

ABSORPTION

MODEL	VOLTAGE (single-phase)		
Single-phase	230 V	240 V	110 V
PLURIJETm 5/90	**8.5** A	**8.2** A	**17.0** A
PLURIJETm 6/90	**10.5** A	**10.0** A	**21.0** A
PLURIJETm 3/130	**8.5** A	**8.2** A	**17.0** A
PLURIJETm 4/130	**10.5** A	**10.0** A	**21.0** A
PLURIJETm 3/200	**8.5** A	**8.2** A	**17.0** A
PLURIJETm 4/200	**10.5** A	**10.0** A	**21.0** A

MODEL	VOLTAGE (three-phase)					
Three-phase	230 V	400 V	690 V	240 V	415 V	720 V
PLURIJET 5/90	**5.7** A	**3.3** A	**1.9** A	**5.5** A	**3.2** A	**1.8** A
PLURIJET 6/90	**8.1** A	**4.7** A	**2.7** A	**7.8** A	**4.5** A	**2.6** A
PLURIJET 3/130	**5.7** A	**3.3** A	**1.9** A	**5.5** A	**3.2** A	**1.8** A
PLURIJET 4/130	**8.5** A	**4.9** A	**2.8** A	**8.1** A	**4.7** A	**2.7** A
PLURIJET 5/130	**8.7** A	**5.0** A	**2.9** A	**8.3** A	**4.8** A	**2.8** A
PLURIJET 6/130	**10.4** A	**6.0** A	**3.5** A	**10.0** A	**5.8** A	**3.4** A
PLURIJET 3/200	**5.7** A	**3.3** A	**1.9** A	**5.5** A	**3.2** A	**1.8** A
PLURIJET 4/200	**8.1** A	**4.7** A	**2.7** A	**7.8** A	**4.5** A	**2.6** A
PLURIJET 5/200	**8.7** A	**5.0** A	**2.9** A	**8.3** A	**4.8** A	**2.8** A
PLURIJET 6/200	**10.4** A	**6.0** A	**3.5** A	**10.0** A	**5.8** A	**3.4** A

PALLETIZATION

MODEL		GROUPAGE / CONTAINER			
		n°	H	kg	
Single-phase	Three-phase	pumps	(mm)	1~	3~
PLURIJETm 5/90	PLURIJET 5/90	**30**	1430	820	760
PLURIJETm 6/90	PLURIJET 6/90	**30**	1430	880	850
PLURIJETm 3/130	PLURIJET 3/130	**40**	1430	1010	940
PLURIJETm 4/130	PLURIJET 4/130	**40**	1430	1100	1060
–	PLURIJET 5/130	**30**	1430	–	860
–	PLURIJET 6/130	**30**	1430	–	880
PLURIJETm 3/200	PLURIJET 3/200	**40**	1430	1010	940
PLURIJETm 4/200	PLURIJET 4/200	**40**	1430	1100	1060
–	PLURIJET 5/200	**30**	1430	–	860
–	PLURIJET 6/200	**30**	1430	–	880

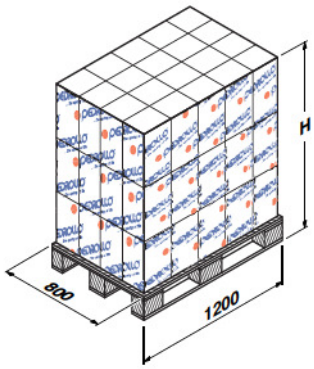

MULTISPEED

Self-priming pump with inverter

PERFORMANCE RANGE

The working pressure can be set at four different values: 1.5 / 2.5 / 3.0 / 3.3 bar.

Pressure selected	Flow rate available
3.3 bar	0 ÷ 45 l/min
3.0 bar	0 ÷ 50 l/min
2.5 bar	0 ÷ 60 l/min
1.5 bar	0 ÷ 75 l/min

APPLICATION LIMITS

- Manometric suction lift up to **9 m** (HS)
- Liquid temperature between **-10 °C** and **+40 °C**
- Ambient temperature up to **+40 °C**
- Max. working pressure **6 bar**
- Continuous service **S1**

CONSTRUCTION AND SAFETY STANDARDS

Complete with **1.5 m** long power cable

EN 60335-1
IEC 60335-1
CEI 61-150

EN 60034-1
IEC 60034-1
CEI 2-3

CERTIFICATIONS

АИ30

INSTALLATION AND USE

Suitable for use with clean water even where air is present and with liquids that are not chemically aggressive towards the materials from which the pump is made.
Under normal working conditions a pump may be required to supply water at various flow rates which also results in variations in the pressure. The MULTISPEED pump automatically varies the rotational speed of the motor according to the required flow rate thereby giving constant pressure and low energy consumption. As a result, the annoying sudden change in pressure that normally occurs when extra taps are opened is eliminated and energy consumption may be reduced by up to 25%. Variable speed operation also reduces the level of noise and the vibration produced by the pump when compared with traditional solutions. The unit also incorporates built in protection that stops the pump if its water supply runs dry.
The pump should be installed in an enclosed environment, or at least sheltered from inclement weather.

PATENTS - TRADE MARKS - MODELS

- MULTISPEED® is a registered trade mark.

GUARANTEE

2 years subject to terms and conditions

CHARACTERISTIC CURVES AND PERFORMANCE DATA

50/60 Hz HS= 0 m

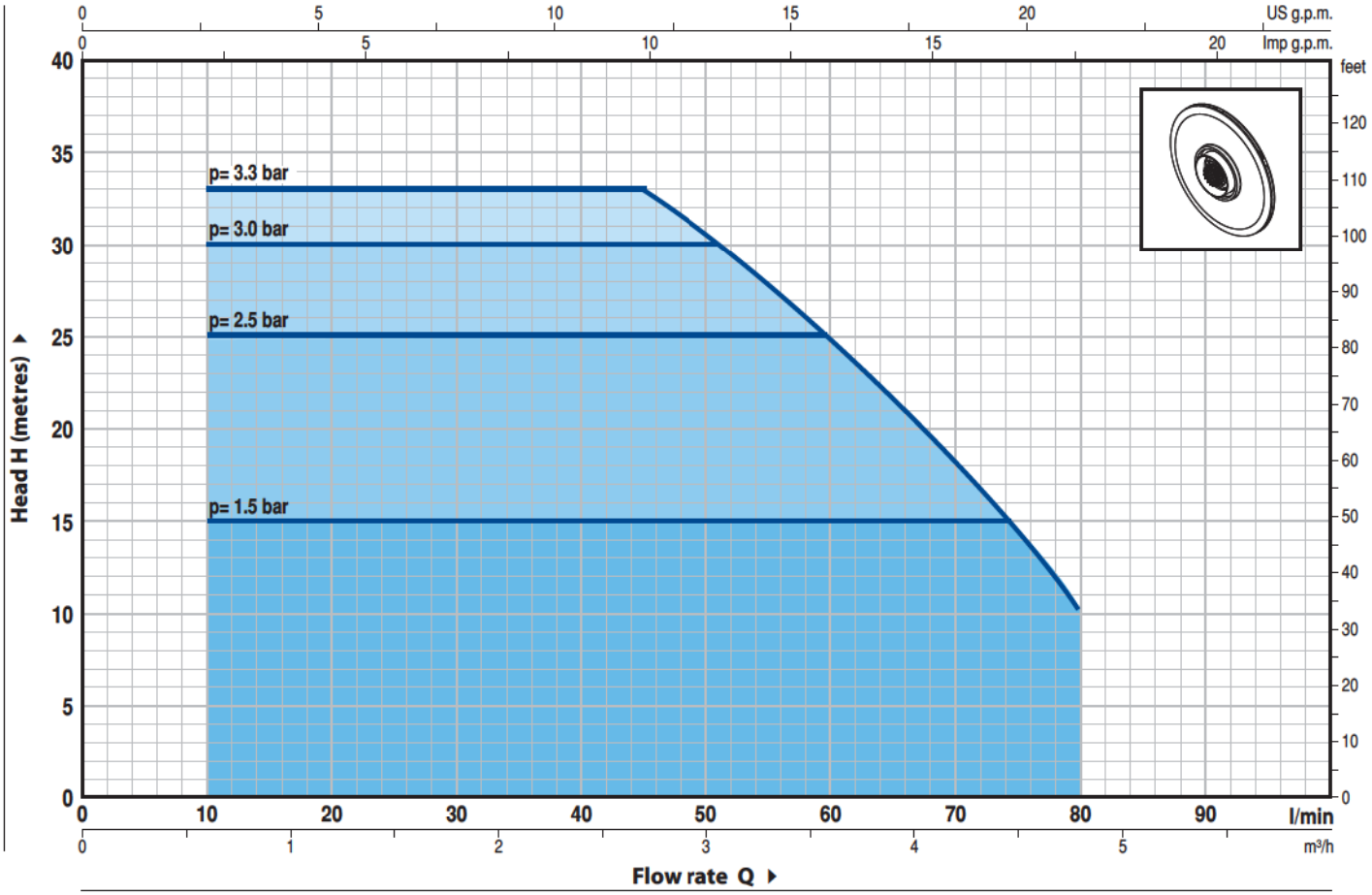

MODEL Single-phase	POWER kW	POWER HP	p Setting Pressure	Q m³/h	0	0.6	2.7	3.0	3.6	4.5	4.8
				Q l/min	**0**	**10**	**45**	**50**	**60**	**75**	**80**
MULTISPEED 3/80	0.45	0.60	**1.5 bar**	H metres	15	15	15	15	15	15	10
			2.5 bar		25	25	25	25	25	15	10
			3.0 bar		30	30	30	30	25	15	10
			3.3. bar		33	33	33	30	25	15	10

Q = Flow rate **H** = Total manometric head **HS** = Suction height

Tolerance of characteristic curves in compliance with EN ISO 9906 App. A.

INSTALLATION EXAMPLE

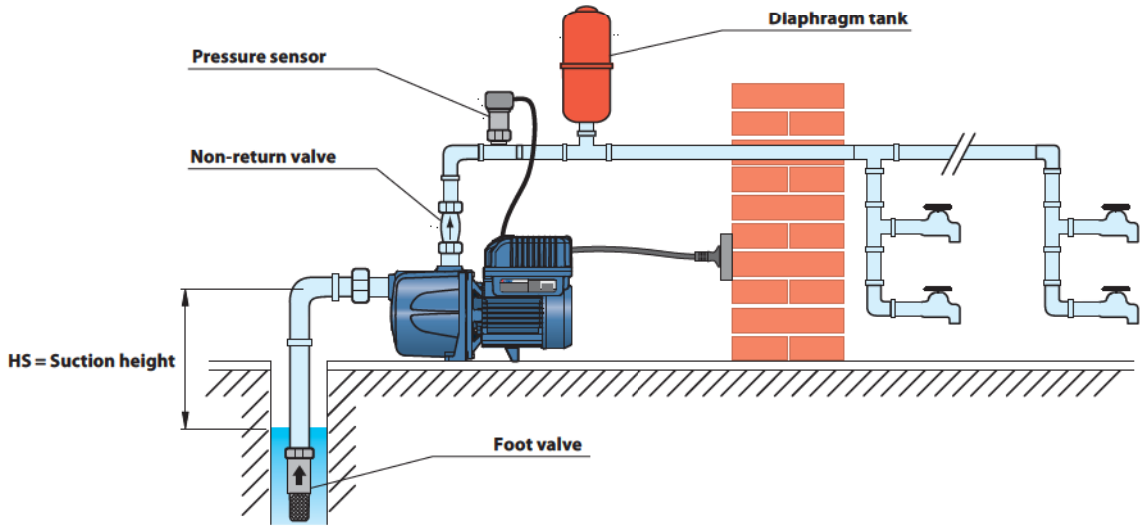

MULTISPEED

POS.	COMPONENT	CONSTRUCTION CHARACTERISTICS
1	**PUMP BODY**	Cast iron, complete with threaded ports in compliance with ISO 228/1
2	**BODY BACKPLATE**	Stainless steel AISI 304
3	**IMPELLERS**	Noryl GFN2V
4	**MOTOR SHAFT**	Stainless steel EN 10088-3 - 1.4104
5	**MECHANICAL SEAL**	***Seal*** / ***Model***: **AR-13** ***Shaft*** / ***Diameter***: **Ø 13** mm *Materials*: *Stationary ring*: Ceramic; *Rotational ring*: Graphite; *Elastomer*: NBR
6	**BEARINGS**	**6202 ZZ - C3 / 6201 ZZ**
7	**INVERTER**	
8	**ELECTRIC MOTOR**	**MULTISPEED**: single-phase 230 V - 50/60 Hz. – Insulation: F class. – Protection: IP 44.
9	**PRESSURE SENSOR**	Complete with **1.5 metre** long cable
10	**POWER CABLE**	**1.5 metre** long "H07 RN-F" cable with Schuko plug

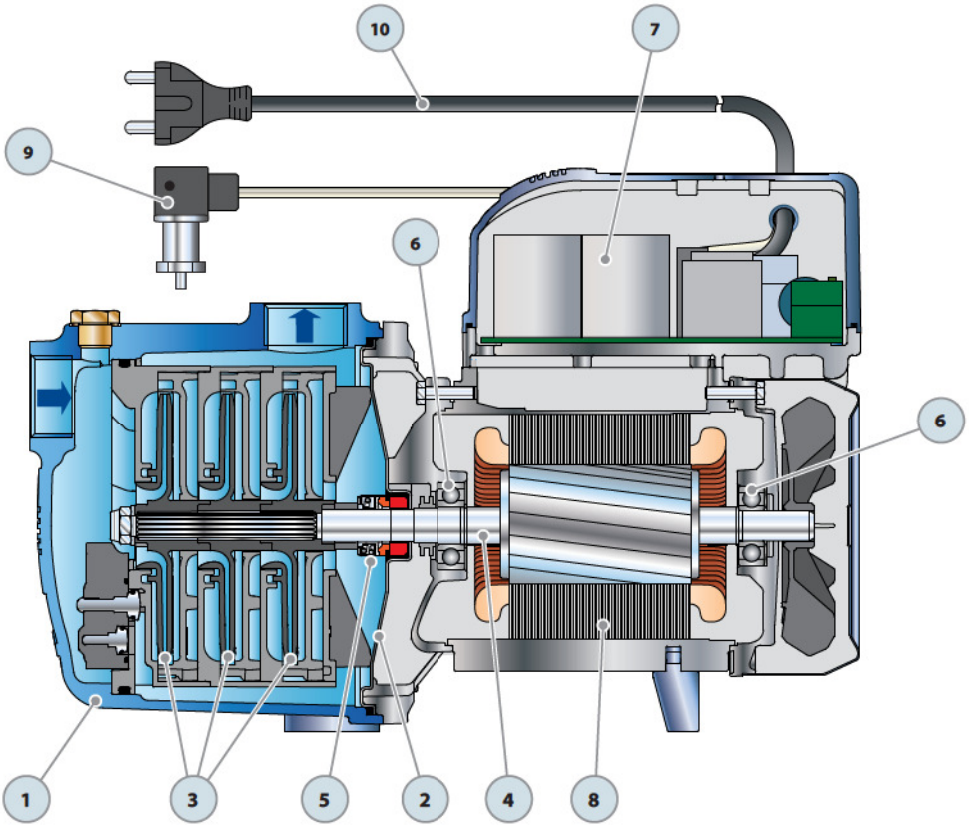

DIMENSIONS AND WEIGHT

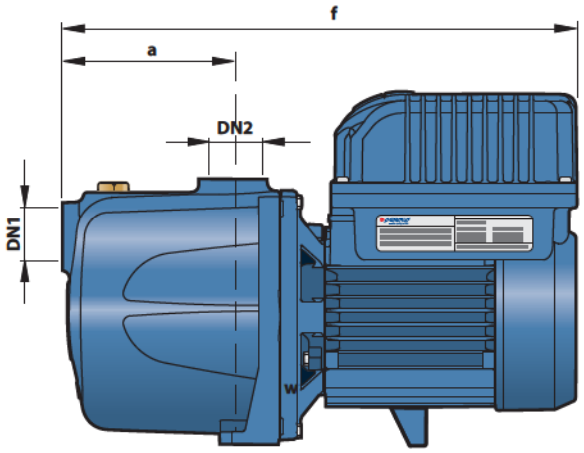

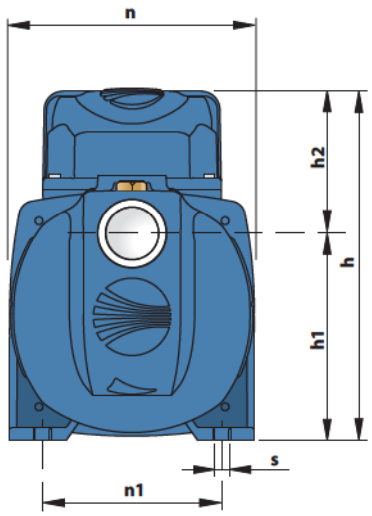

MODEL	PORTS		DIMENSIONS mm									kg
Single-phase	DN1	DN2	a	f	h	h1	h2	n	n1	w	s	1~
MULTISPEED 3/80	**1"**	**1"**	110	339	225	134	91	158	116	2	9	**12.3**

ABSORPTION

MODEL	VOLTAGE (single-phase)
Single-phase	230 V
MULTISPEED 3/80	**7.0** A

PALLETIZATION

MODEL	GROUPAGE / CONTAINER		
Single-phase	n° pumps	H (mm)	kg 1~
MULTISPEED 3/80	**48**	1180	610

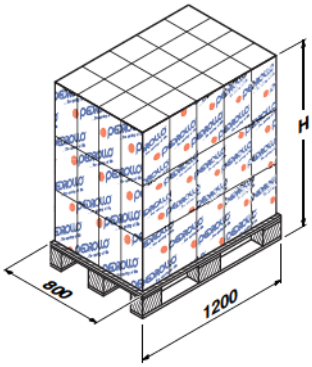

CK

Self-priming liquid ring pumps

PERFORMANCE RANGE

- Flow rate up to **50 l/min** (3 m^3/h)
- Head up to **51 m**

APPLICATION LIMITS

- Manometric suction lift up to **9 m** (HS)
- Liquid temperature between **-10 °C** and **+90 °C**
- Temperature of diesel up to **+55°C**
- Ambient temperature up to **+40 °C**
- Max. working pressure **6 bar**
- Continuous service **S1**

CONSTRUCTION AND SAFETY STANDARDS

EN 60335-1
IEC 60335-1
CEI 61-150

EN 60034-1
IEC 60034-1
CEI 2-3

CERTIFICATIONS

АИ30

УкрТЕСТ-003

INSTALLATION AND USE

Suitable for use with diesel, clean water that does not contain abrasive particles and liquids that are not chemically aggressive towards the materials from which the pump is made.
As a specific result of the pump's operating principle they are suitable for use in all situations where a compact self-priming pump is required or where the fluid supply is limited, irregular or contains air.
The pump should be installed in an enclosed environment, or at least sheltered from inclement weather.

PATENTS - TRADE MARKS - MODELS

- Motor bracket: patent n° IT1243605
- CK 80/90 Registered Community Design n° 342159-0008

OPTIONALS AVAILABLE ON REQUEST

- **CK-INT** pump with switch and power cable complete with Schuko plug
- **CKm 50-BP/NZ** pump with aluminium trigger dispensing nozzle and 4 metre long spiral reinforced hose.
- Special mechanical seal
- Other voltages or 60 Hz frequency
- IP 55 class protection

GUARANTEE

2 years subject to terms and conditions

CHARACTERISTIC CURVES AND PERFORMANCE DATA

50 Hz n= 2900 1/min HS= 0 m

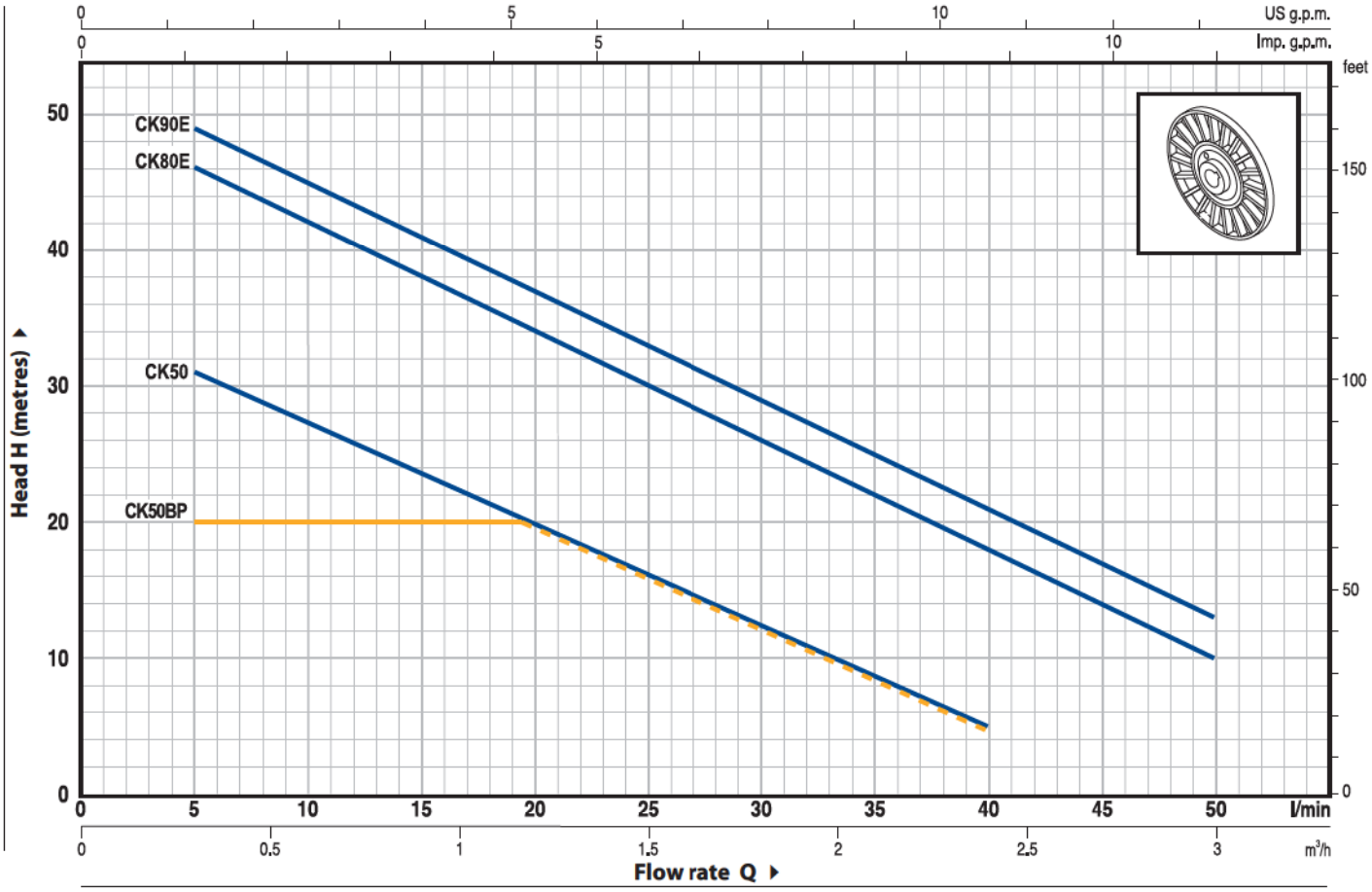

MODEL		POWER		Q m³/h	0	0.3	0.6	0.9	1.2	1.5	1.8	2.1	2.4	3.0
Single-phase	Three-phase	kW	HP	Q l/min	**0**	**5**	**10**	**15**	**20**	**25**	**30**	**35**	**40**	**50**
CKm 50	**CK 50**	0.37	0.50	H metres	35	31	27	24	20	16	13	9	5	
CKm 50-BP	**CK 50-BP**	0.25	0.33		20	20	20	20	20	16.5	13	9	5	
CKm 80E	**CK 80E**	0.55	0.75		48	46	42	38	34	30	26	22	18	10
CKm 90E	**CK 90E**	0.75	1		51	49	45	41	37	33	29	25	21	13

Q = Flow rate **H** = Total manometric head **HS** = Suction height

Tolerance of characteristic curves in compliance with EN ISO 9906 App. A.

CK 50-BP = pump with integral by-pass

INSTALLATION EXAMPLE

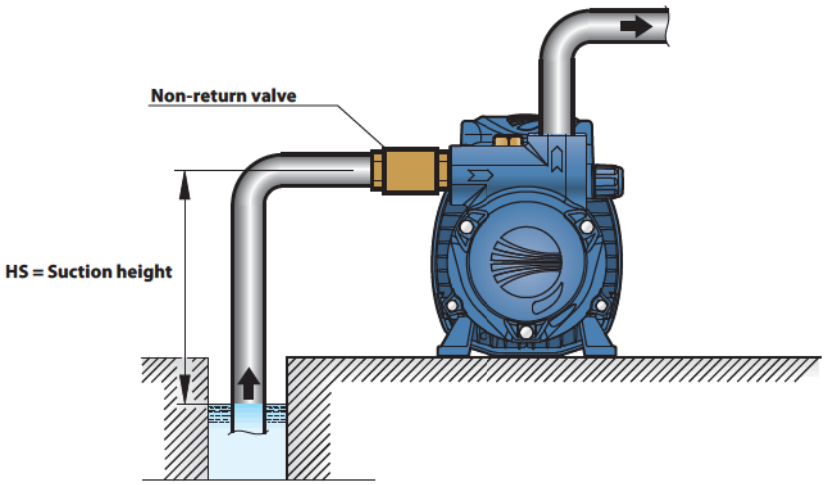

POS.	COMPONENT	CONSTRUCTION CHARACTERISTICS
1	PUMP BODY	Cast iron, complete with threaded ports in compliance with ISO 228/1
2	MOTOR BRACKET	Aluminium with brass insert (patented), reduces the risk of impeller seizure
3	IMPELLER	Brass, star type with open radial vanes
4	MOTOR SHAFT	Stainless steel EN 10088-3 - 1.4104

5 MECHANICAL SEAL

Seal	*Shaft*	*Materials*		
Model	*Diameter*	*Stationary ring*	*Rotational ring*	*Elastomer*
AR-12V	**Ø 12** mm	Ceramic	Graphite	Viton

6 BEARINGS

Pump	*Model*
CK 50 **CK 50-BP**	**6201 ZZ / 6201 ZZ**
CK 80 **CK 90**	**6203 ZZ / 6203 ZZ**

7 CAPACITOR

Pump	*Capacitance*	
Single-phase	*(230 V or 240 V)*	*(110 V)*
CKm 50 **CKm 50-BP**	**12.5** µF 450 VL	**30** µF 250 VL
CKm 80E	**16** µF 450 VL	**60** µF 300 VL
CKm 90E	**20** µF 450 VL	**60** µF 300 VL

8 ELECTRIC MOTOR

CKm: single-phase 230 V - 50 Hz with thermal overload protector built-in to the winding.
CK: three-phase 230/400 V - 50 Hz.

➠ **Pumps fitted with the three-phase motor option offer IE2 (IEC 60034-30) class high performance**

– Insulation: F class.
– Protection: IP 44.

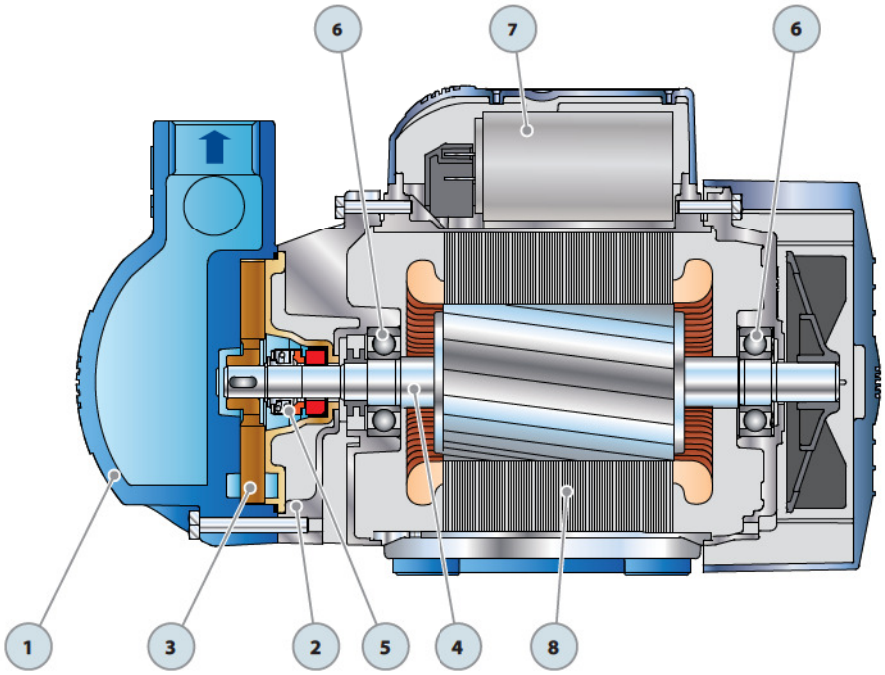

DIMENSIONS AND WEIGHT

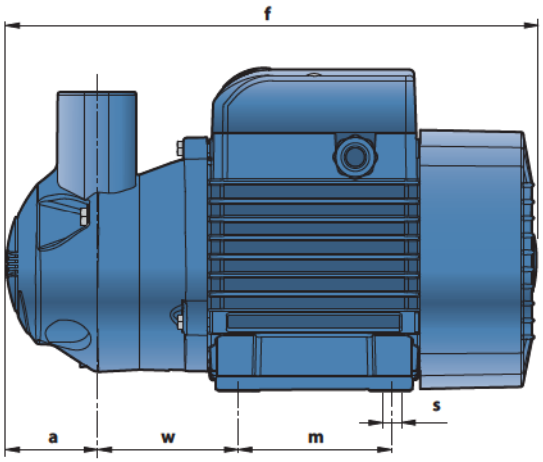

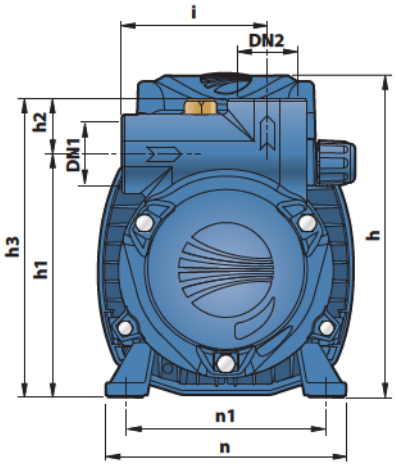

MODEL		PORTS		DIMENSIONS mm												kg	
Single-phase	Three-phase	DN1	DN2	a	f	h	h1	h2	h3	i	m	n	n1	w	s	1~	3~
CKm 50	CK 50	¾"	¾"	41	260	159	128	25	153	75	80	120	100	69	7	**7.4**	**6.8**
CKm 50-BP	CK 50-BP			44	263												
CKm 80E	CK 80E	1"	1"	50	296	180	136	31	167	81	90	140	112	77		**10.8**	**9.9**
CKm 90E	CK 90E															**10.9**	**10.0**

ABSORPTION

MODEL	VOLTAGE (single-phase)		
Single-phase	230 V	240 V	110 V
CKm 50	**3.0** A	**2.9** A	**6.2** A
CKm 50-BP	**3.0** A	**2.9** A	**6.2** A
CKm 80E	**5.0** A	**4.8** A	**9.8** A
CKm 90E	**4.8** A	**4.4** A	**9.4** A

MODEL	VOLTAGE (three-phase)					
Three-phase	230 V	400 V	690 V	240 V	415 V	720 V
CK 50	**2.1** A	**1.2** A	**0.7** A	**2.0** A	**1.2** A	**0.7** A
CK 50-BP	**2.1** A	**1.2** A	**0.7** A	**2.0** A	**1.2** A	**0.7** A
CK 80E	**3.5** A	**2.0** A	**1.2** A	**3.4** A	**2.0** A	**1.2** A
CK 90E	**3.5** A	**2.0** A	**1.2** A	**3.4** A	**2.0** A	**1.2** A

PALLETIZATION

MODEL		GROUPAGE				CONTAINER			
		n°	H	kg		n°	H	kg	
Single-phase	Three-phase	pumps	(mm)	1~	3~	pumps	(mm)	1~	3~
CKm 50	CK 50	**120**	1280	910	840	**180**	1850	1350	1240
CKm 50-BP	CK 50-BP	**120**	1280	910	840	**180**	1850	1350	1240
CKm 80E	CK 80E	**102**	1370	1120	1030	**136**	1780	1490	1370
CKm 90E	CK 90E	**102**	1370	1130	1040	**136**	1780	1500	1380

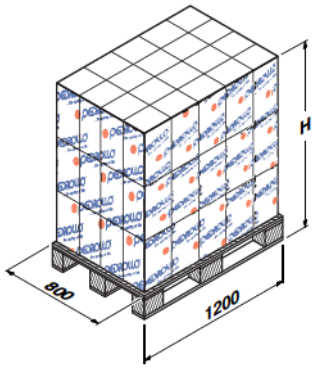

CKR

Self-priming liquid ring pumps

with double anti-seize inserts

PERFORMANCE RANGE

- Flow rate up to **50 l/min** (3 m^3/h)
- Head up to **51 m**

APPLICATION LIMITS

- Manometric suction lift up to **9 m** (HS)
- Liquid temperature between **-10 °C** and **+90 °C**
- Temperature of diesel up to **+55°C**
- Ambient temperature up to **+40 °C**
- Max. working pressure **6 bar**
- Continuous service **S1**

CONSTRUCTION AND SAFETY STANDARDS

EN 60335-1
IEC 60335-1
CEI 61-150

EN 60034-1
IEC 60034-1
CEI 2-3

CERTIFICATIONS

АИ30

УкрТЕСТ-003

INSTALLATION AND USE

Suitable for use with clean water or liquids that do not contain abrasive particles and liquids that are not chemically aggressive towards the materials from which the pump is made.
As a specific result of the pump's operating principle they are suitable for use in all situations where a compact self-priming pump is required or where the fluid supply is limited, irregular or contains air.
The pump should be installed in an enclosed environment, or at least sheltered from inclement weather.

PATENTS - TRADE MARKS - MODELS

- Motor bracket: patent n° IT1243605
- Registered Community Design n° 342159-0008

OPTIONALS AVAILABLE ON REQUEST

- Special mechanical seal
- Other voltages or 60 Hz frequency
- IP 55 class protection

GUARANTEE

2 years subject to terms and conditions

CHARACTERISTIC CURVES AND PERFORMANCE DATA

50 Hz n= 2900 1/min HS= 0 m

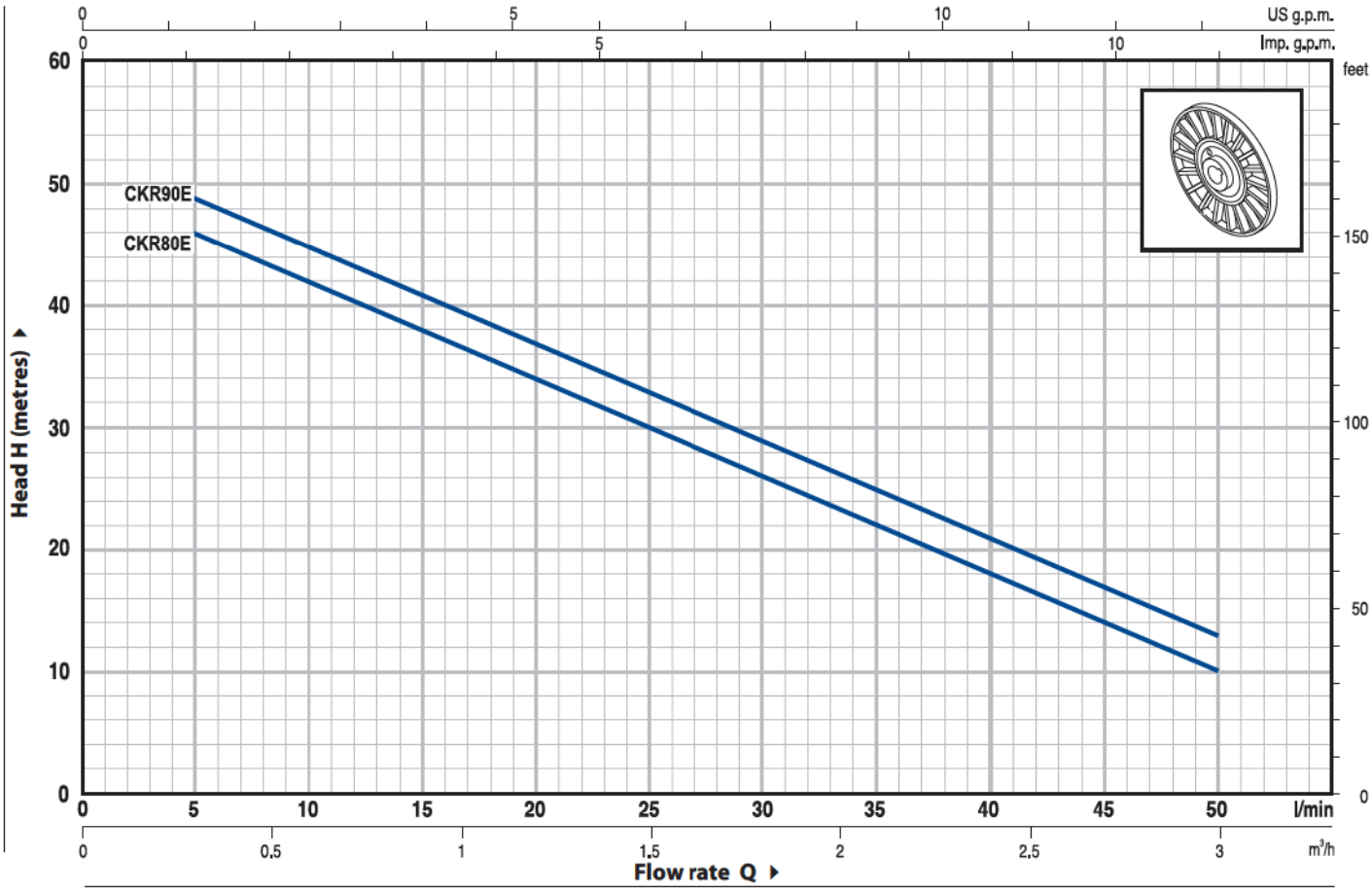

MODEL		POWER		Q										
Single-phase	Three-phase	kW	HP	m³/h	0	0.3	0.6	0.9	1.2	1.5	1.8	2.1	2.4	3.0
				l/min	**0**	**5**	**10**	**15**	**20**	**25**	**30**	**35**	**40**	**50**
CKRm 80E	**CKR 80E**	0.55	0.75	H metres	48	46	42	38	34	30	26	22	18	10
CKRm 90E	**CKR 90E**	0.75	1		51	49	45	41	37	33	29	25	21	13

Q = Flow rate **H** = Total manometric head **HS** = Suction height

Tolerance of characteristic curves in compliance with EN ISO 9906 App. A.

INSTALLATION EXAMPLE

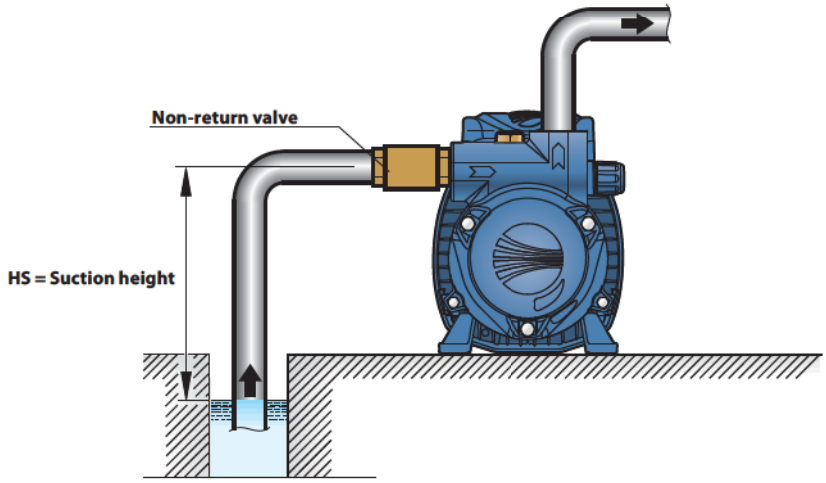

POS.	COMPONENT	CONSTRUCTION CHARACTERISTICS
1	**PUMP BODY**	Cast iron, with stainless steel insert to prevent impeller seizure due to the formation of rust . The pump body is complete with threaded ports in compliance with ISO 228/1
2	**MOTOR BRACKET**	Aluminium with brass insert (patented), reduces the risk of impeller seizure
3	**IMPELLER**	Brass, star type with open radial vanes
4	**MOTOR SHAFT**	Stainless steel EN 10088-3 - 1.4104

5 MECHANICAL SEAL

Seal	*Shaft*	*Materials*		
Model	***Diameter***	*Stationary ring*	*Rotational ring*	*Elastomer*
AR-12V	**Ø 12** mm	Ceramic	Graphite	Viton

6 BEARINGS **6203 ZZ / 6203 ZZ**

7 CAPACITOR

Pump	*Capacitance*	
Single-phase	***(230 V or 240 V)***	***(110 V)***
CKRm 80E	**16** µF 450 VL	**60** µF 300 VL
CKRm 90E	**20** µF 450 VL	**60** µF 300 VL

8 ELECTRIC MOTOR

CKRm: single-phase 230 V - 50 Hz with thermal overload protector built-in to the winding.
CKR: three-phase 230/400 V - 50 Hz.

➡ **Pumps fitted with the three-phase motor option offer IE2 (IEC 60034-30) class high performance**

– Insulation: F class.
– Protection: IP 44.

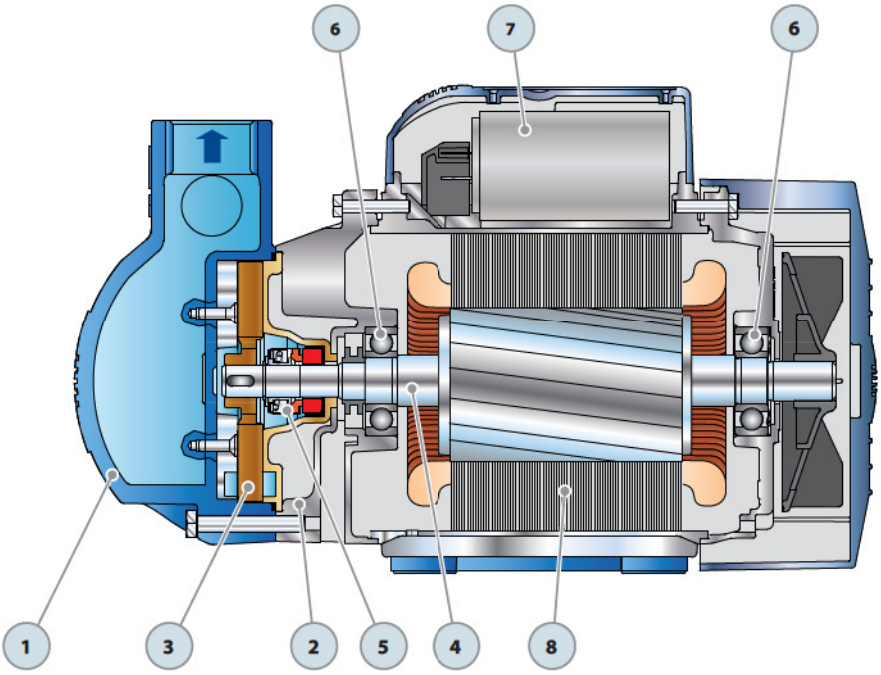

DIMENSIONS AND WEIGHT

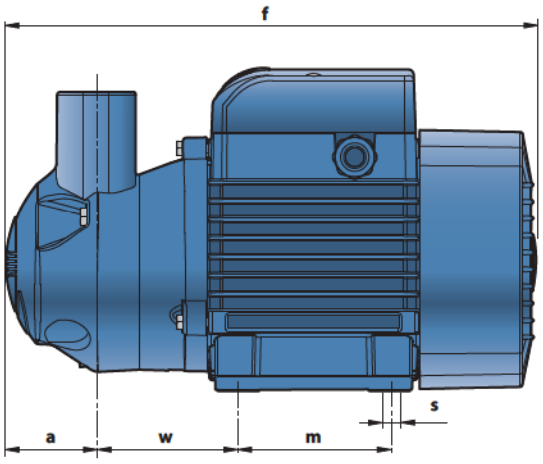

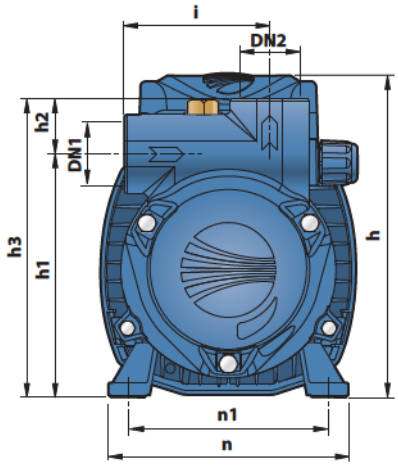

MODEL		PORTS		DIMENSIONS mm												kg	
Single-phase	Three-phase	DN1	DN2	a	f	h	h1	h2	h3	i	m	n	n1	w	s	1~	3~
CKRm 80E	CKR 80E	1"	1"	50	296	180	136	31	167	81	90	140	112	77	7	**10.8**	**9.9**
CKRm 90E	CKR 90E															**10.9**	**10.0**

ABSORPTION

MODEL	VOLTAGE (single-phase)		
Single-phase	230 V	240 V	110 V
CKRm 80E	**5.0** A	**4.8** A	**9.8** A
CKRm 90E	**4.8** A	**4.4** A	**9.4** A

MODEL	VOLTAGE (three-phase)					
Three-phase	230 V	400 V	690 V	240 V	415 V	720 V
CKR 80E	**3.5** A	**2.0** A	**1.2** A	**3.4** A	**2.0** A	**1.2** A
CKR 90E	**3.5** A	**2.0** A	**1.2** A	**3.4** A	**2.0** A	**1.2** A

PALLETIZATION

MODEL		GROUPAGE				CONTAINER			
		n°	H	kg		n°	H	kg	
Single-phase	Three-phase	pumps	(mm)	1~	3~	pumps	(mm)	1~	3~
CKRm 80E	CKR 80E	**102**	1370	1120	1030	**136**	1780	1490	1370
CKRm 90E	CKR 90E	**102**	1370	1130	1040	**136**	1780	1500	1380

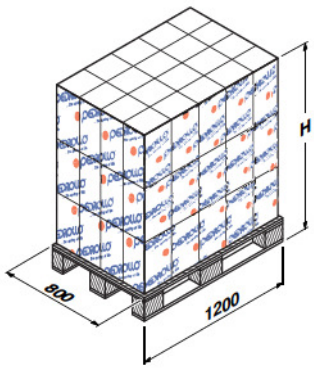

PK-PQ /Bz

Pumps with peripheral impellers and bronze pump bodies

PERFORMANCE RANGE

- Flow rate up to **70 l/min** (4.2 m^3/h)
- Head up to **90 m**

APPLICATION LIMITS

- Manometric suction lift up to **8 m**
- Liquid temperature between **-10 °C** and **+90 °C**
- Ambient temperature up to **+40 °C**
- Max. working pressure **10 bar**
- Continuous service **S1**

CONSTRUCTION AND SAFETY STANDARDS

EN 60034-1
IEC 60034-1
CEI 2-3

CERTIFICATIONS

АИЗО

УкрТЕСТ-003

INSTALLATION AND USE

Suitable for use with clean water that does not contain abrasive particles and liquids that are not chemically aggressive towards the materials from which the pump is made.
The design solution of these pumps guarantees against the formation of rust and oxidation. As a result of their compact design and characteristic curves they are suitable for use in industrial applications such as cooling and conditioning, etc.
The pump should be installed in an enclosed environment, or at least sheltered from inclement weather.

PATENTS - TRADE MARKS - MODELS

- Motor bracket: patent n° IT1243605

OPTIONALS AVAILABLE ON REQUEST

- Special mechanical seal
- Other voltages or 60 Hz frequency
- IP 55 class protection

GUARANTEE

2 years subject to terms and conditions

CHARACTERISTIC CURVES AND PERFORMANCE DATA

50 Hz n= 2900 1/min HS= 0 m

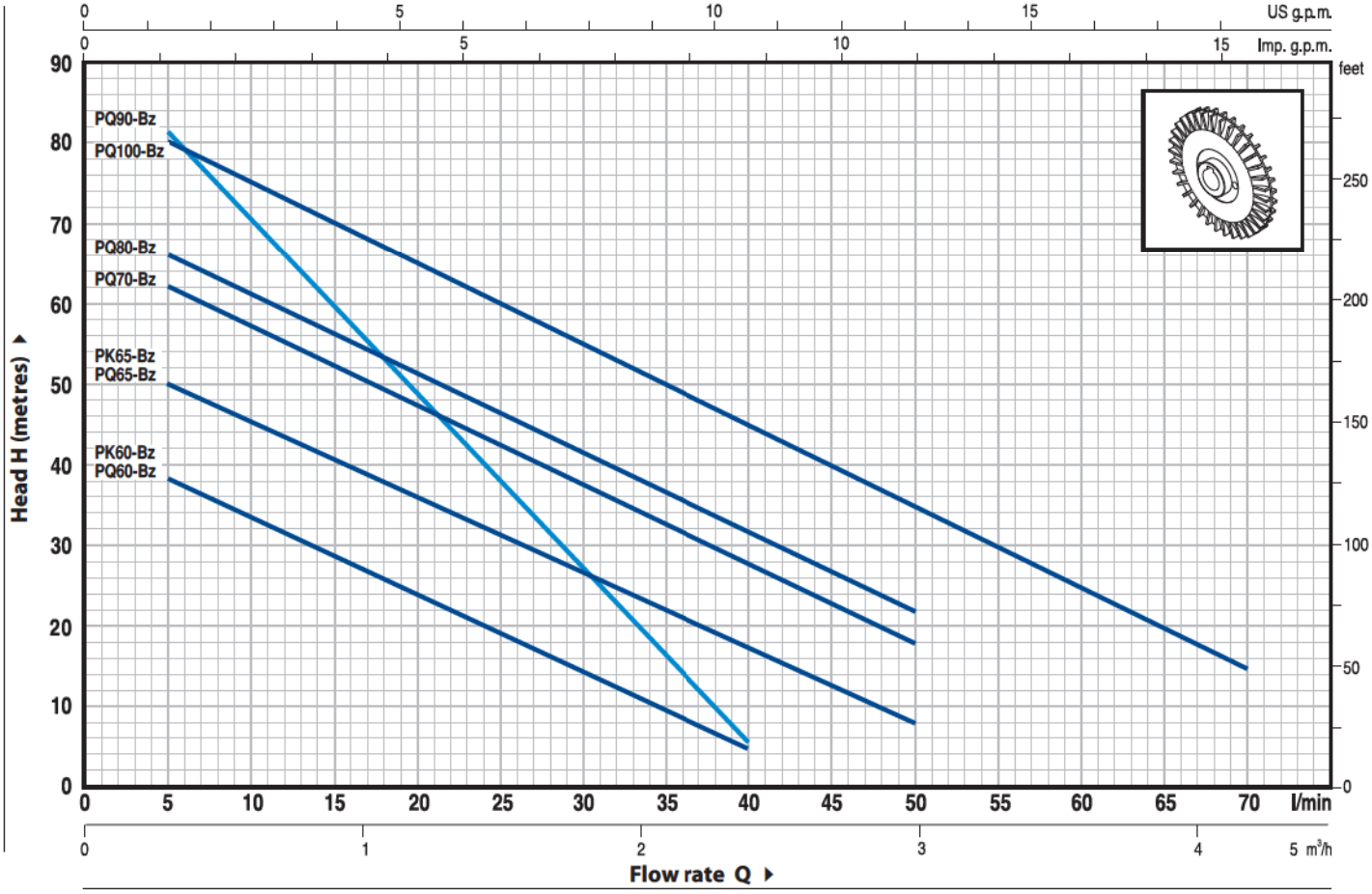

MODEL		POWER		Q m³/h	0	0.3	0.6	0.9	1.2	1.5	1.8	2.1	2.4	3.0	3.6	4.2
Single-phase	Three-phase	kW	HP	l/min	**0**	**5**	**10**	**15**	**20**	**25**	**30**	**35**	**40**	**50**	**60**	**70**
PKm 60-Bz	**PK 60-Bz**	0.37	0.50	H metres	40	38	33.5	29	24	19.5	15	10	5			
PQm 60-Bz	**PQ 60-Bz**															
PKm 65-Bz	**PK 65-Bz**	0.50	0.70		55	50	45.5	40.5	36	31	27	22	17	8		
PQm 65-Bz	**PQ 65-Bz**															
PQm 70-Bz	**PQ 70-Bz**	0.60	0.85		65	62	57	52	47	42	37	32	27	18		
PQm 80-Bz	**PQ 80-Bz**	0.75	1		70	66	61	56	51	46	41	36.5	31	22		
PQm 90-Bz	**PQ 90-Bz**	0.75	1		90	82	71	60	49	38	27	17	5			
PQm 100-Bz	**PQ 100-Bz**	1.1	1.5		85	80	75	70	65	60	55	50	45	35	25	15

Q = Flow rate **H** = Total manometric head **HS** = Suction height

Tolerance of characteristic curves in compliance with EN ISO 9906 App. A.

PK-Bz

POS.	COMPONENT	CONSTRUCTION CHARACTERISTICS
1	**PUMP BODY**	Bronze, complete with threaded ports in compliance with ISO 228/1
2	**MOTOR BRACKET**	Aluminium with brass insert (patented), reduces the risk of impeller seizure
3	**IMPELLER**	Brass, with peripheral radial vanes
4	**MOTOR SHAFT**	Stainless steel AISI 316

5 MECHANICAL SEAL

Seal	*Shaft*	*Materials*		
Model	*Diameter*	*Stationary ring*	*Rotational ring*	*Elastomer*
FN-12V	**Ø 12** mm	Graphite	Ceramic	Viton

6 BEARINGS **6201 ZZ - C3 / 6201 ZZ - C3**

7 CAPACITOR

Pump	*Capacitance*	
Single-phase	*(230 V or 240 V)*	*(110 V)*
PKm 60-Bz	**10** µF 450 VL	**25** µF 250 VL
PKm 65-Bz	**14** µF 450 VL	**30** µF 250 VL

8 ELECTRIC MOTOR

PKm-Bz: single-phase 230 V - 50 Hz with thermal overload protector built-in to the winding.
PK-Bz: three-phase 230/400 V - 50 Hz.

➡ **Pumps fitted with the three-phase motor option offer IE2 (IEC 60034-30) class high performance**

– Insulation: F class.
– Protection: IP 44.

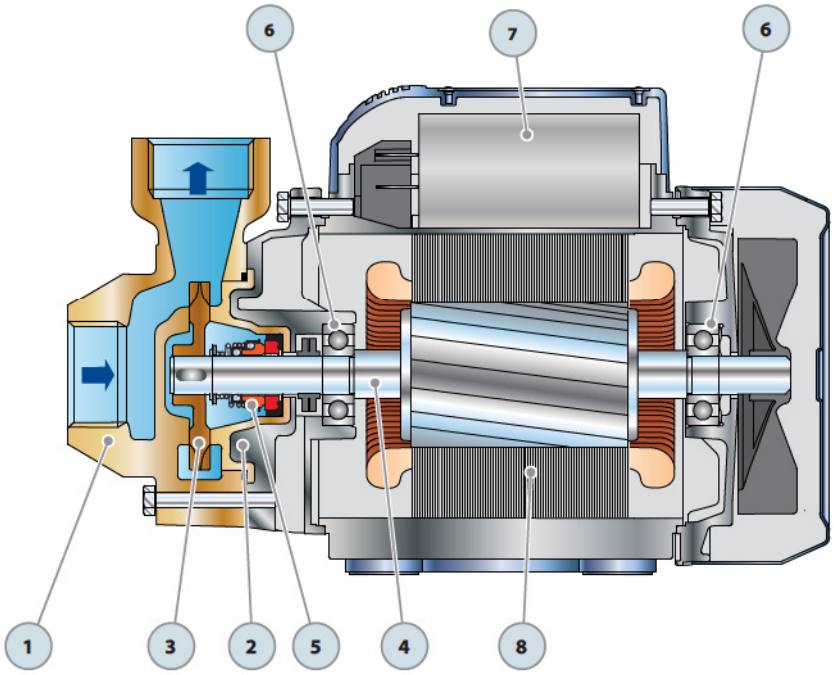

POS.	COMPONENT	CONSTRUCTION CHARACTERISTICS
1	PUMP BODY	Bronze, complete with threaded ports in compliance with ISO 228/1
2	MOTOR BRACKET	Aluminium with brass insert (patented), reduces the risk of impeller seizure
3	IMPELLER	Brass, with peripheral radial vanes
4	MOTOR SHAFT	Stainless steel AISI 316

5 MECHANICAL SEAL

Pump	*Seal*	*Shaft*	*Materials*		
Model	*Model*	*Diameter*	*Stationary ring*	*Rotational ring*	*Elastomer*
PQ 60/65/70/80/90-Bz	**FN-12V**	**Ø 12** mm	Graphite	Ceramic	Viton
PQ 100-Bz	**FN-14V**	**Ø 14** mm	Graphite	Ceramic	Viton

6 BEARINGS

Pump	*Model*
PQ 60/65-Bz	**6201 ZZ - C3 / 6201 ZZ - C3**
PQ 70/80/90-Bz	**6203 ZZ - C3 / 6203 ZZ - C3**
PQ 100-Bz	**6204 ZZ - C3 / 6204 ZZ - C3**

7 CAPACITOR

Pump	*Capacitance*	
Single-phase	*(230 V or 240 V)*	*(110 V)*
PQm 60-Bz	**10** µF 450 VL	**25** µF 250 VL
PQm 65-Bz	**14** µF 450 VL	**30** µF 250 VL
PQm 70-Bz	**16** µF 450 VL	**60** µF 300 VL
PQm 80-Bz	**20** µF 450 VL	**60** µF 300 VL
PQm 90-Bz	**20** µF 450 VL	**60** µF 300 VL
PQm 100-Bz	**31.5** µF 450 VL	**60** µF 250 VL

8 ELECTRIC MOTOR

PQm-Bz: single-phase 230 V - 50 Hz with thermal overload protector built-in to the winding.
PQ-Bz: three-phase 230/400 V - 50 Hz.

➠ **Pumps fitted with the three-phase motor option offer IE2 (IEC 60034-30) class high performance**

– Insulation: F class.
– Protection: IP 44.

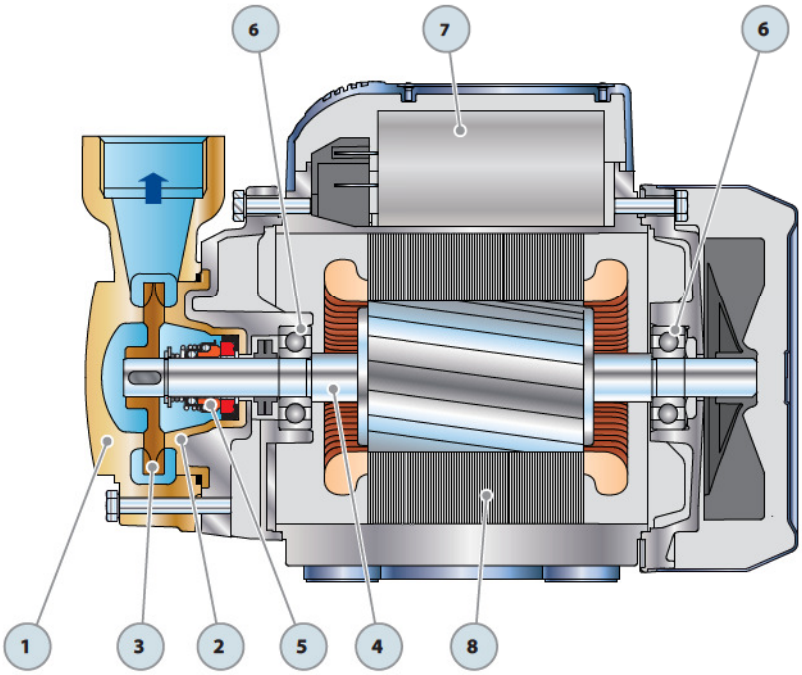

PK-PQ /Bz

DIMENSIONS AND WEIGHT

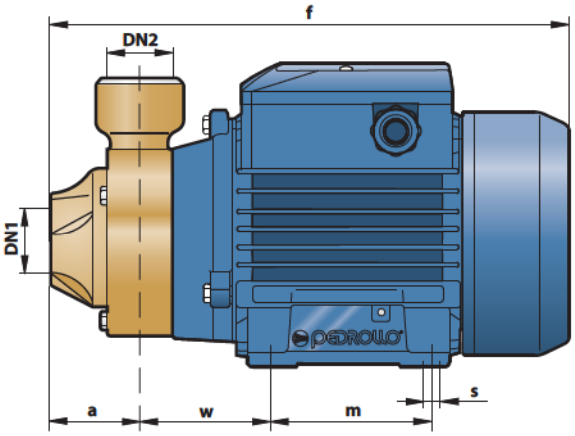

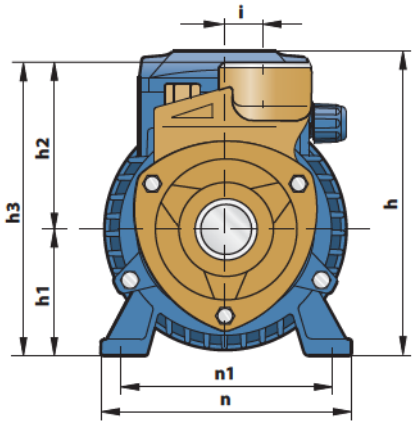

MODEL		PORTS		DIMENSIONS mm												kg	
Single-phase	Three-phase	DN1	DN2	a	f	h	h1	h2	h3	i	m	n	n1	w	s	1~	3~
PKm 60-Bz	**PK 60-Bz**	1″	1″	42	243	152	63	75	138	20	80	120	100	55	7	**5.7**	**5.7**
PKm 65-Bz	**PK 65-Bz**			48	250			80	143							**7.2**	**6.8**

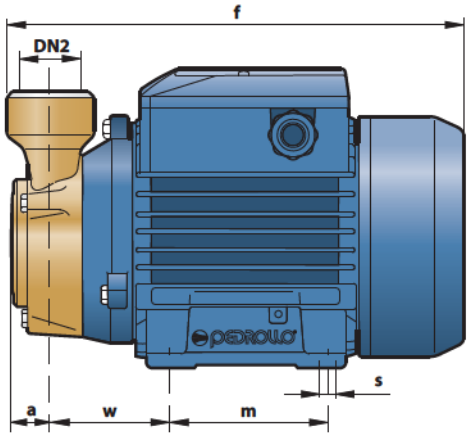

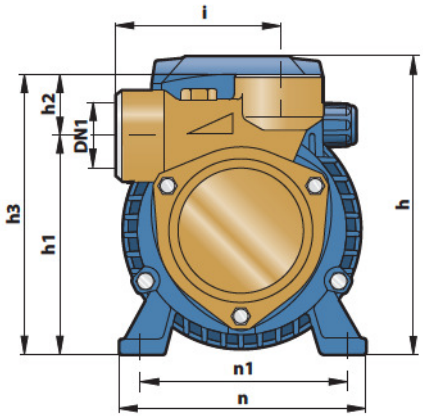

MODEL		PORTS		DIMENSIONS mm												kg	
Single-phase	Three-phase	DN1	DN2	a	f	h	h1	h2	h3	i	m	n	n1	w	s	1~	3~
PQm 60-Bz	**PQ 60-Bz**	1″	1″	22	225	152	108	30	138	78	80	120	100	55	7	**5.5**	**5.5**
PQm 65-Bz	**PQ 65-Bz**						113		143					57		**7.0**	**6.5**
PQm 70-Bz	**PQ 70-Bz**				255	180	121		151	83	90	138	112	62		**10.0**	**9.1**
PQm 80-Bz	**PQ 80-Bz**															**10.0**	**9.1**
PQm 90-Bz	**PQ 90-Bz**	¾″	¾″				126	27	153	84						**10.2**	**9.1**
PQm 100-Bz	**PQ 100-Bz**	1″	1″	25	318	212	140	30	170	89	100	164	125	85	9	**15.3**	**13.4**

ABSORPTION

MODEL	VOLTAGE (single-phase)		
Single-phase	230 V	240 V	110 V
PKm 60-Bz	**2.6** A	**2.5** A	**5.0** A
PKm 65-Bz	**3.7** A	**3.4** A	**7.5** A

MODEL	VOLTAGE (three-phase)					
Three-phase	230 V	400 V	690 V	240 V	415 V	720 V
PK 60-Bz	**1.9** A	**1.15** A	**0.6** A	**1.9** A	**1.1** A	**0.6** A
PK 65-Bz	**2.9** A	**1.7** A	**0.9** A	**2.8** A	**1.6** A	**0.9** A

MODEL	VOLTAGE (single-phase)		
Single-phase	230 V	240 V	110 V
PQm 60-Bz	**2.6** A	**2.5** A	**5.0** A
PQm 65-Bz	**3.7** A	**3.4** A	**7.5** A
PQm 70-Bz	**5.2** A	**4.8** A	**10.8** A
PQm 80-Bz	**5.2** A	**4.8** A	**10.8** A
PQm 90-Bz	**5.6** A	**5.1** A	**11.5** A
PQm 100-Bz	**9.0** A	**8.2** A	**18.0** A

MODEL	VOLTAGE (three-phase)					
Three-phase	230 V	400 V	690 V	240 V	415 V	720 V
PQ 60-Bz	**1.9** A	**1.15** A	**0.6** A	**1.9** A	**1.1** A	**0.6** A
PQ 65-Bz	**2.9** A	**1.7** A	**0.9** A	**2.8** A	**1.6** A	**0.9** A
PQ 70-Bz	**3.8** A	**2.2** A	**1.3** A	**3.3** A	**1.9** A	**1.1** A
PQ 80-Bz	**3.8** A	**2.2** A	**1.3** A	**3.3** A	**1.9** A	**1.1** A
PQ 90-Bz	**4.2** A	**2.4** A	**1.4** A	**3.8** A	**2.2** A	**1.3** A
PQ 100-Bz	**6.3** A	**3.6** A	**2.05** A	**5.7** A	**3.3** A	**1.9** A

PALLETIZATION

MODEL		GROUPAGE / CONTAINER			
		n°	H	kg	
Single-phase	Three-phase	pumps	(mm)	1~	3~
PKm 60-Bz	PK 60-Bz	**192**	1460	1100	1100
PKm 65-Bz	PK 65-Bz	**216**	1630	1580	1490

MODEL		GROUPAGE / CONTAINER			
		n°	H	kg	
Single-phase	Three-phase	pumps	(mm)	1~	3~
PQm 60-Bz	PQ 60-Bz	**192**	1460	1080	1080
PQm 65-Bz	PQ 65-Bz	**216**	1630	1530	1420
PQm 70-Bz	PQ 70-Bz	**120**	1270	1220	1110
PQm 80-Bz	PQ 80-Bz	**120**	1270	1220	1110
PQm 90-Bz	PQ 90-Bz	**120**	1280	1240	1110
PQm 100-Bz	PQ 100-Bz	**72**	1490	1120	990

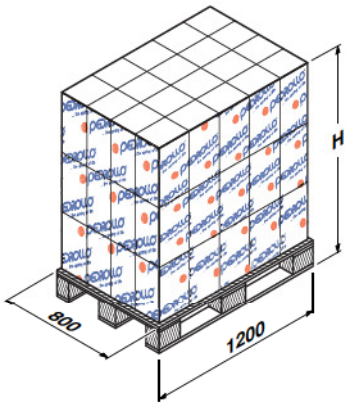

PK-PQ /I

Pumps with stainless steel pump body

PERFORMANCE RANGE

- Flow rate up to **40 l/min** (2.4 m^3/h)
- Head up to **40 m**

APPLICATION LIMITS

- Manometric suction lift up to **8 m**
- Liquid temperature between **-10 °C** and **+90 °C**
- Ambient temperature up to **+40 °C**
- Max. working pressure **10 bar**
- Continuous service **S1**

CONSTRUCTION AND SAFETY STANDARDS

EN 60034-1
IEC 60034-1
CEI 2-3

CERTIFICATIONS

АИ30

INSTALLATION AND USE

Suitable for use with clean water that does not contain abrasive particles and liquids that are not chemically aggressive towards the materials from which the pump is made.
The design solution of these pumps guarantees against the formation of rust and oxidation. As a result of their compact design and characteristic curves they are suitable for use in industrial applications such as cooling and conditioning, etc.
The pump should be installed in an enclosed environment, or at least sheltered from inclement weather.

PATENTS - TRADE MARKS - MODELS

- Motor bracket: patent n° IT1243605

OPTIONALS AVAILABLE ON REQUEST

- Special mechanical seal
- Other voltages or 60 Hz frequency
- IP 55 class protection

GUARANTEE

2 years subject to terms and conditions

CHARACTERISTIC CURVES AND PERFORMANCE DATA

50 Hz n= 2900 1/min HS= 0 m

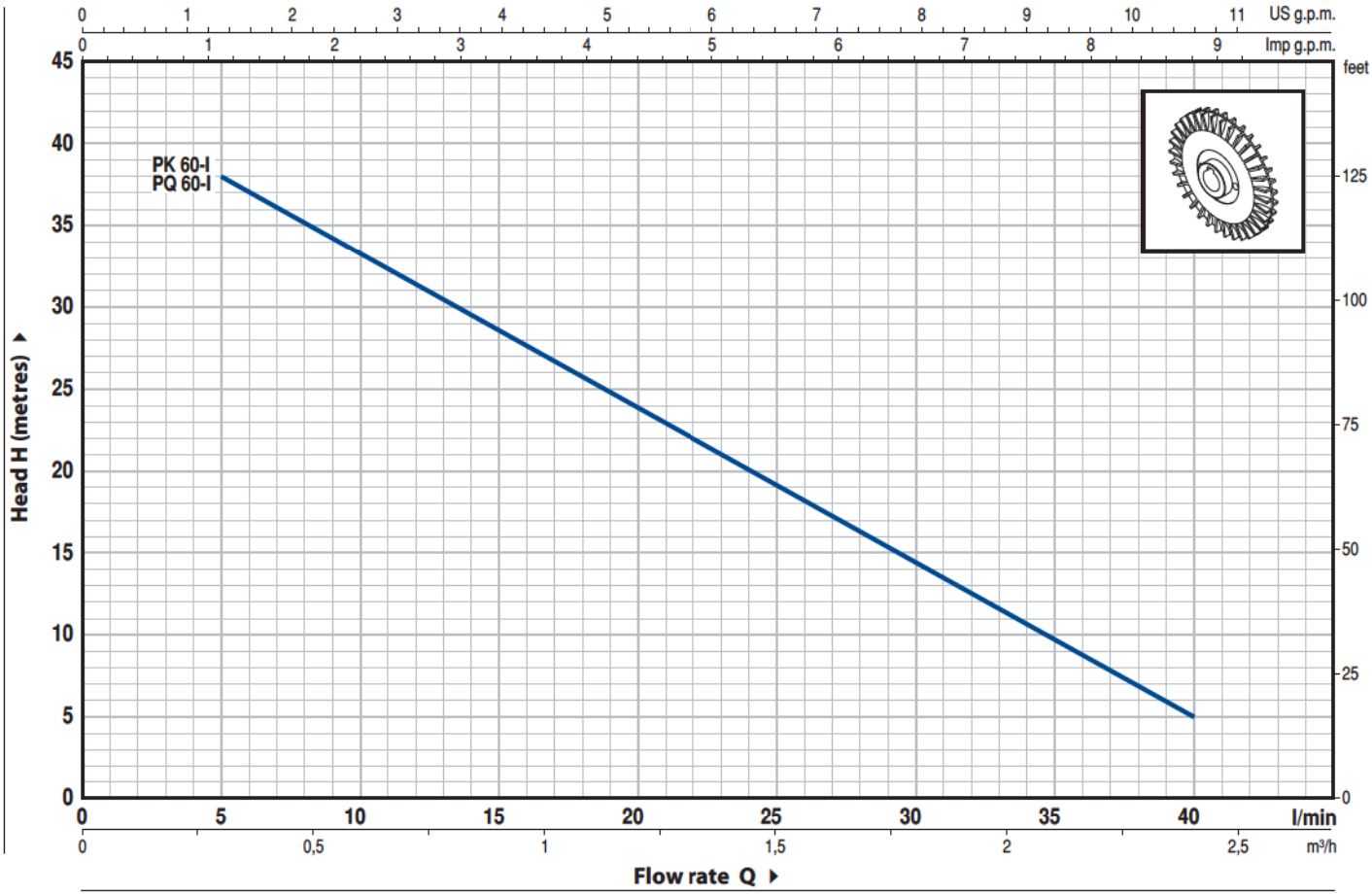

MODEL		POWER		Q									
Single-phase	Three-phase	kW	HP		m³/h	0	0.3	0.6	0.9	1.2	1.5	1.8	2.1	2.4
					l/min	**0**	**5**	**10**	**15**	**20**	**25**	**30**	**35**	**40**
PKm 60-I **PQm 60-I**	**PK 60-I** **PQ 60-I**	0.37	0.50	**H**	metres	40	38	33.5	29	24	19.5	15	10	5

Q = Flow rate **H** = Total manometric head **HS** = Suction height

Tolerance of characteristic curves in compliance with EN ISO 9906 App. A.

PK-PQ /I

POS.	COMPONENT	CONSTRUCTION CHARACTERISTICS
1	**PUMP BODY**	Precision cast stainless steel AISI 316, complete with threaded ports in compliance with ISO 228/1
2	**MOTOR BRACKET**	Aluminium with brass insert (patented), reduces the risk of impeller seizure
3	**IMPELLER**	Brass, with peripheral radial vanes
4	**MOTOR SHAFT**	Stainless steel AISI 316

5 MECHANICAL SEAL

Pump	*Seal*	*Shaft*	*Materials*		
Model	*Model*	*Diameter*	*Stationary ring*	*Rotational ring*	*Elastomer*
PK 60-I **PQ 60-I**	**FN-12V**	**Ø 12** mm	Graphite	Ceramic	Viton

6 BEARINGS

Pump	*Model*
PK 60-I **PQ 60-I**	**6201 ZZ - C3 / 6201 ZZ - C3**

7 CAPACITOR

Pump	*Capacitance*	
Single-phase	*(230 V or 240 V)*	*(110 V)*
PKm 60-I **PQm 60-I**	**10** µF 450 VL	**25** µF 250 VL

8 ELECTRIC MOTOR

PKm-I PQm-I: single-phase 230 V - 50 Hz with thermal overload protector built-in to the winding.
PK-I PQ-I: three-phase 230/400 V - 50 Hz.

➡ **Pumps fitted with the three-phase motor option offer IE2 (IEC 60034-30) class high performance**

– Insulation: F class.
– Protection: IP 44.

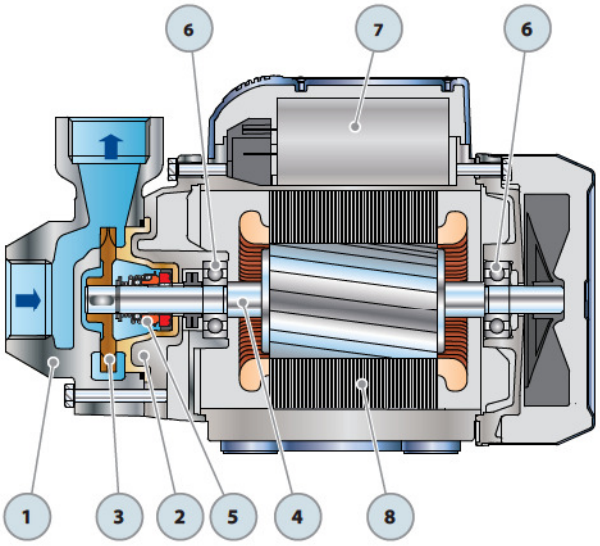

PK 60-I

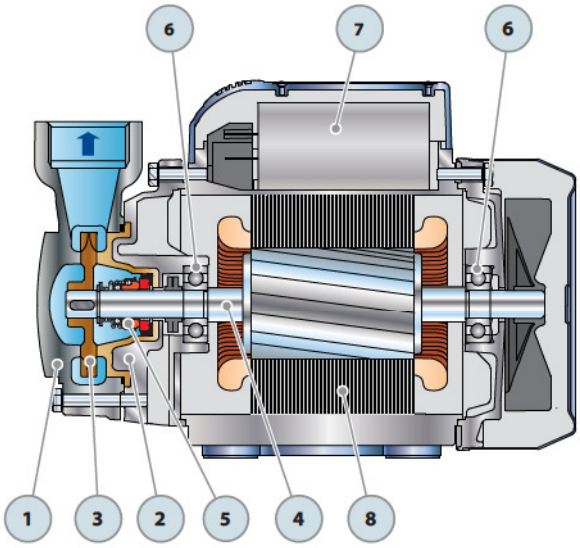

PQ 60-I

DIMENSIONS AND WEIGHT

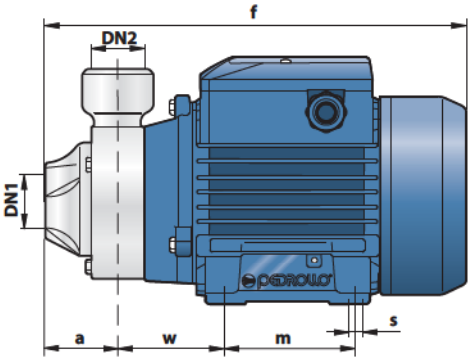

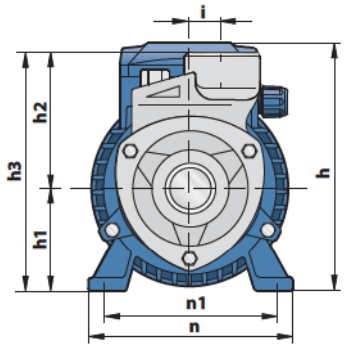

MODEL		PORTS		DIMENSIONS mm												kg	
Single-phase	Three-phase	DN1	DN2	a	f	h	h1	h2	h3	i	m	n	n1	w	s	1~	3~
PKm 60-I	PK 60-I	1"	1"	42	245	152	63	75	138	20	80	120	100	55	7	**5.5**	**5.5**

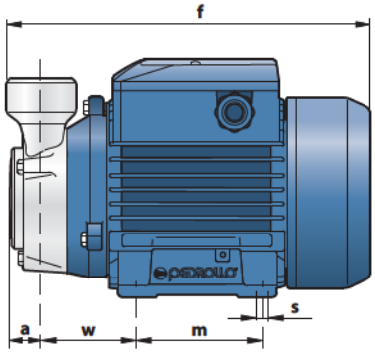

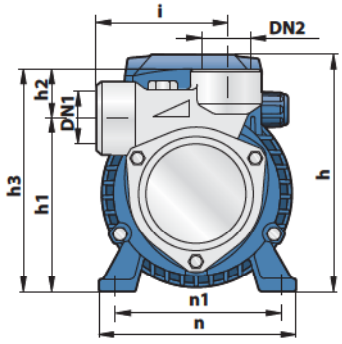

MODEL		PORTS		DIMENSIONS mm												kg	
Single-phase	Three-phase	DN1	DN2	a	f	h	h1	h2	h3	i	m	n	n1	w	s	1~	3~
PQm 60-I	PQ 60-I	1"	1"	22	225	152	108	30	138	78	80	120	100	55	7	**5.4**	**5.4**

ABSORPTION

MODEL	VOLTAGE (single-phase)		
Single-phase	230 V	240 V	110 V
PKm 60-I	**2.5** A	**2.4** A	**5.0** A
PQm 60-I	**2.5** A	**2.4** A	**5.0** A

MODEL	VOLTAGE (three-phase)					
Three-phase	230 V	400 V	690 V	240 V	415 V	720 V
PK 60-I	**1.9** A	**1.15** A	**0.6** A	**1.9** A	**1.1** A	**0.6** A
PQ 60-I	**1.9** A	**1.15** A	**0.6** A	**1.9** A	**1.1** A	**0.6** A

PALLETIZATION

MODEL		GROUPAGE / CONTAINER			
		n°	H	kg	
Single-phase	Three-phase	pumps	(mm)	1~	3~
PKm 60-I	PK 60-I	**192**	1460	1080	1080
PQm 60-I	PQ 60-I	**192**	1460	1060	1060

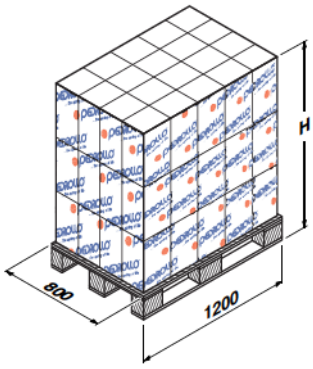

Standardised "EN 733" centrifugal pumps

PERFORMANCE RANGE

- Flow rate up to **6000 l/min** (360 m^3/h)
- Head up to **95 m**

APPLICATION LIMITS

- Manometric suction lift up to **7 m**
- Liquid temperature between **-10 °C** and **+90 °C**
- Ambient temperature between **-10 °C** and **+40 °C**
- Max. pressure in pump body **10 bar** (PN10)
- Continuous service **S1**

CONSTRUCTION AND SAFETY STANDARDS

EN 60034-1
IEC 60034-1
CEI 2-3

Pump body dimensions in compliance with **EN 733**

CERTIFICATIONS

АИЗО

УкрТЕСТ-003

INSTALLATION AND USE

- Water supply
- Pressure boosting
- Irrigation
- Water circulation in climatisation sets
- Cleaning sets
- Firefighting sets
- Industrial applications
- Agricultural applications

The pumps must be installed in enclosed places, or at least protected against inclement weather.

OPTIONALS AVAILABLE ON REQUEST

- Special mechanical seal
- Other voltages or 60 Hz frequency
- Compatibility with hotter or colder liquids
- Compatibility with hotter or colder ambients

GUARANTEE

2 years subject to terms and conditions

PERFORMANCE RANGE **50 Hz** **n= 2900 1/min** HS= 0 m

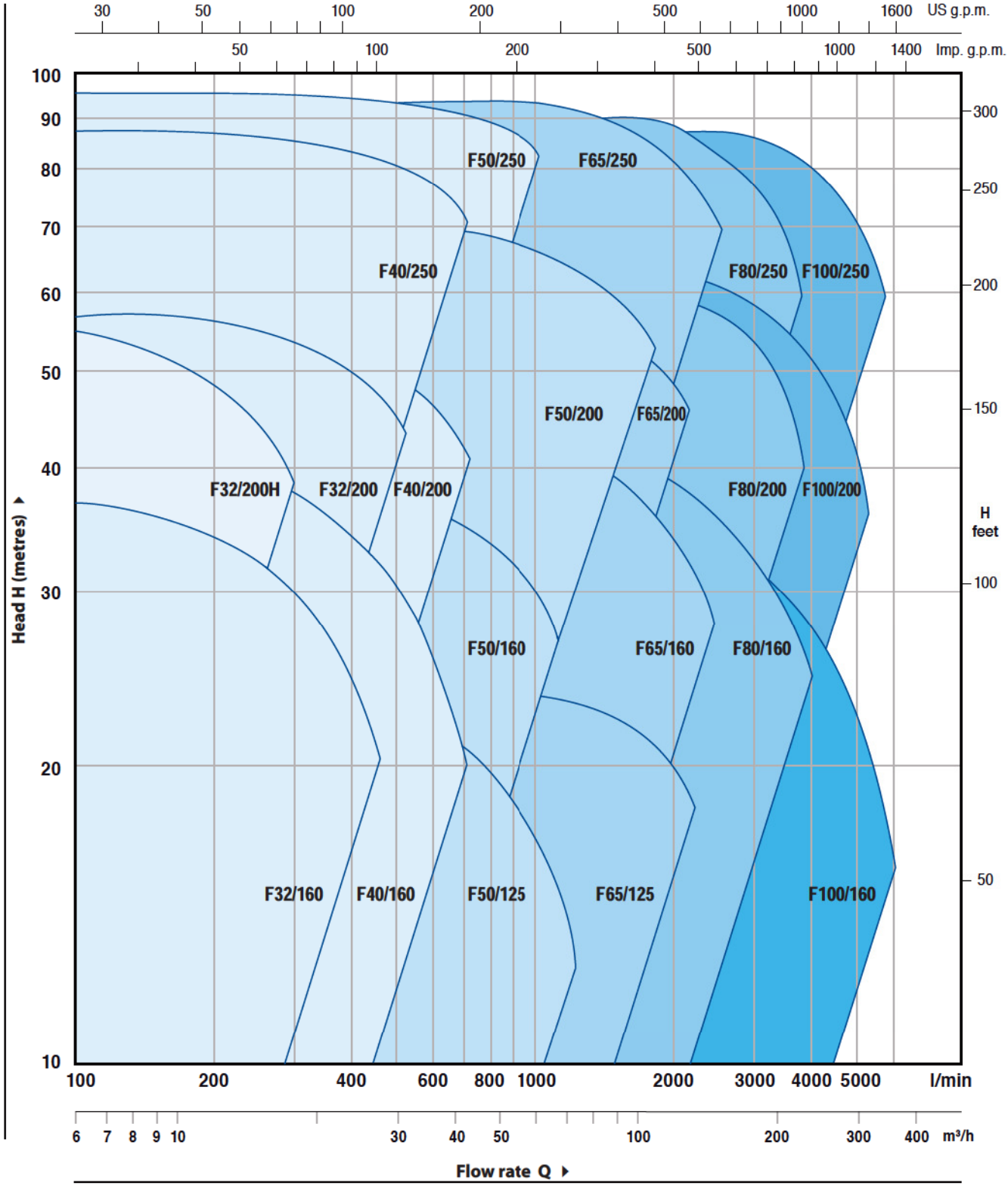

F32/160

CHARACTERISTIC CURVES AND PERFORMANCE DATA

50 Hz n= 2900 1/min HS= 0 m

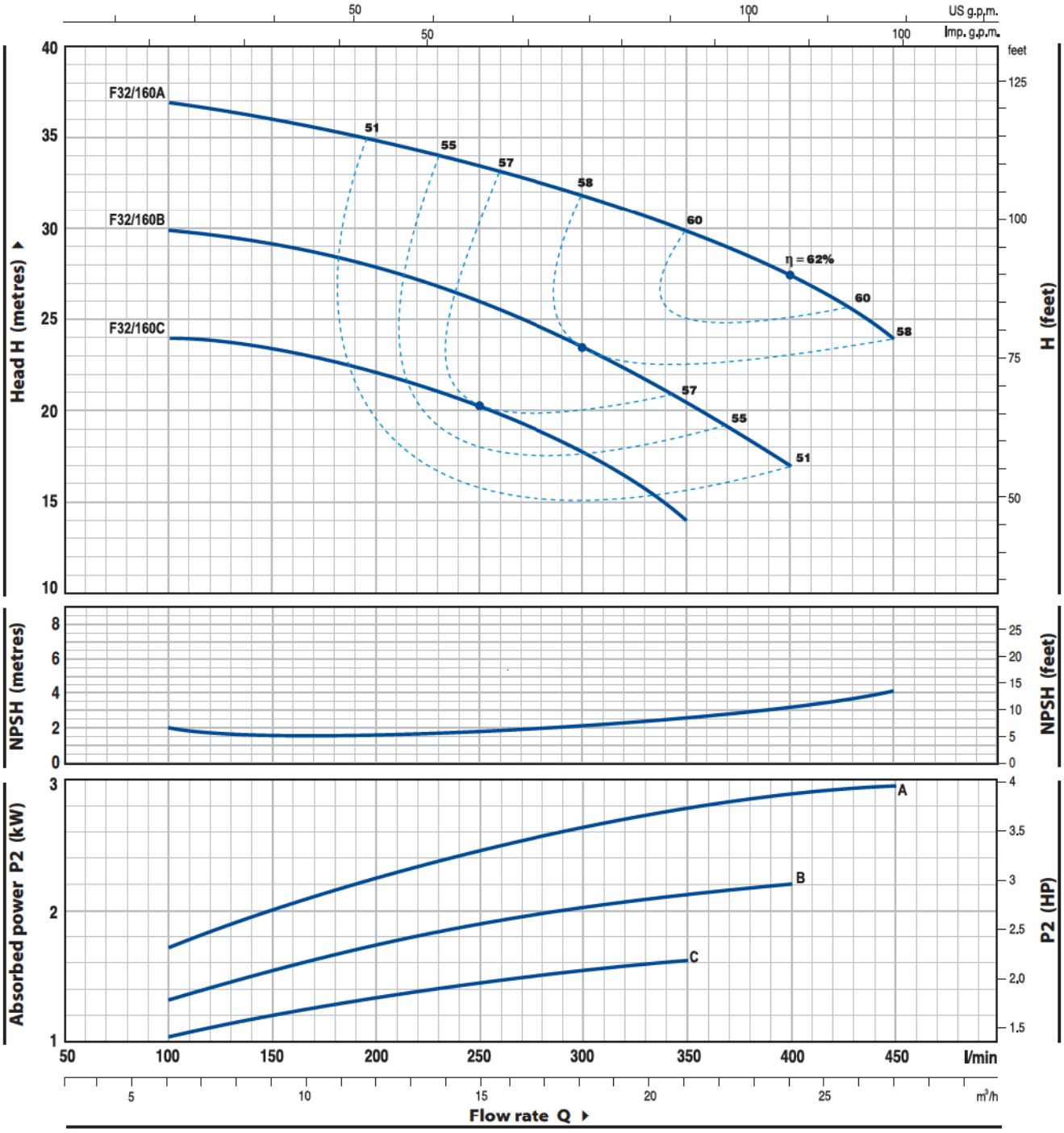

MODEL		POWER		Q m³/h	0	6	9	12	15	18	21	24	27
Single-phase	Three-phase	kW	HP	Q l/min	**0**	**100**	**150**	**200**	**250**	**300**	**350**	**400**	**450**
Fm 32/160C	**F 32/160C**	1.5	2		25	24	23.5	22	20.5	18	14		
Fm 32/160B	**F 32/160B**	2.2	3	**H** metres	31	30	29	28	26	23.5	20.5	17	
–	**F 32/160A**	3	4		38	37	36	35	33.5	31.5	30	27.5	24

Q = Flow rate **H** = Total manometric head **HS** = Suction height

Tolerance of characteristic curves in compliance with EN ISO 9906 App. A.

CHARACTERISTIC CURVES AND PERFORMANCE DATA

50 Hz n= 2900 1/min HS= 0 m

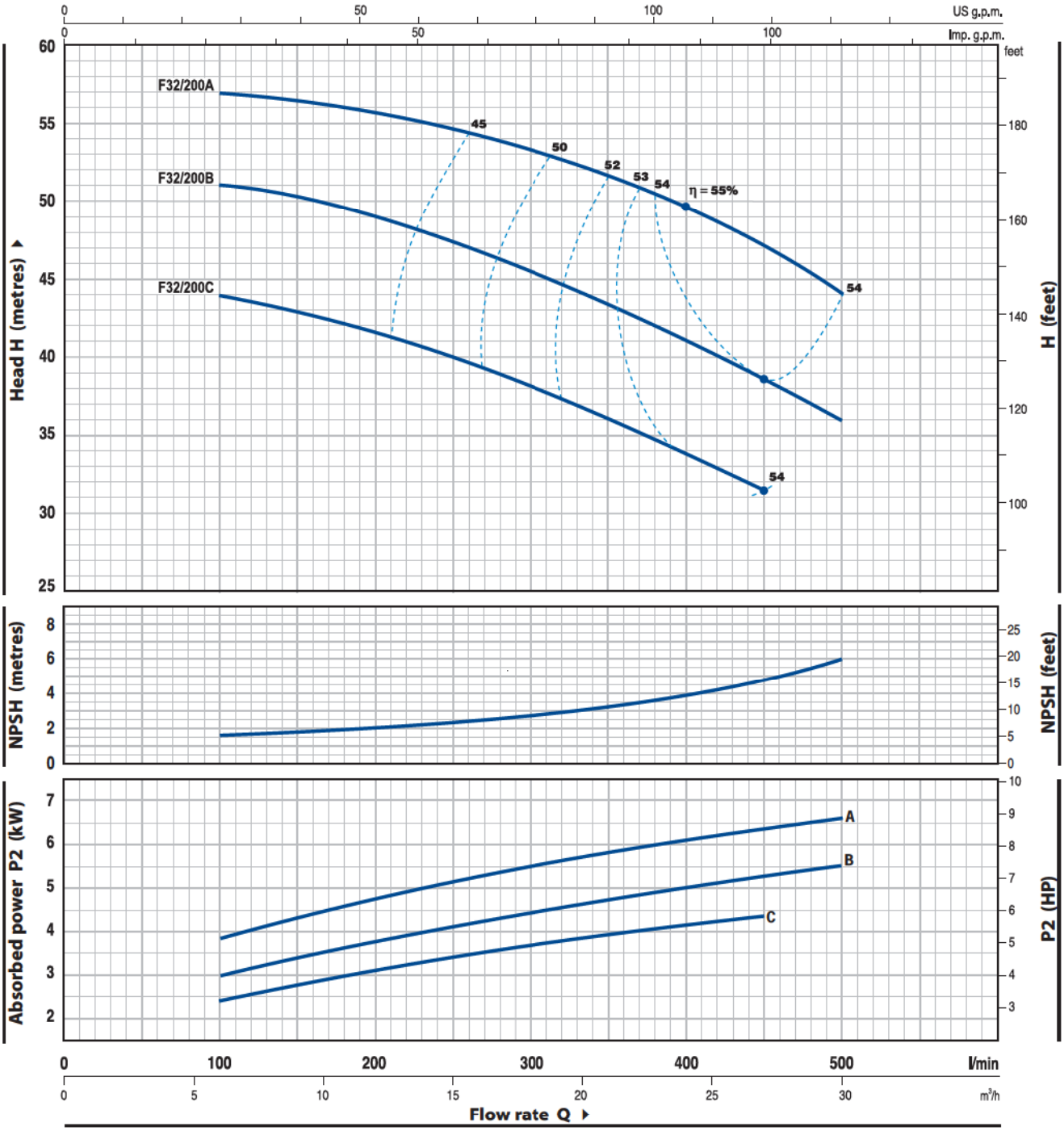

MODEL	POWER		Q m³/h	0	6	9	12	15	18	21	24	27	30
Three-phase	kW	HP	Q l/min	**0**	**100**	**150**	**200**	**250**	**300**	**350**	**400**	**450**	**500**
F 32/200C	4	5.5		46	44	43	41.5	40	38	36	34	31.5	
F 32/200B	5.5	7.5	**H** metres	52	51	50.5	49	47	45	43	41	38.5	36
F 32/200A	7.5	10		60	57	56.5	56	55	53.5	52	50	47	44

Q = Flow rate **H** = Total manometric head **HS** = Suction height

Tolerance of characteristic curves in compliance with EN ISO 9906 App. A.

F32/200H

CHARACTERISTIC CURVES AND PERFORMANCE DATA

50 Hz n= 2900 1/min HS= 0 m

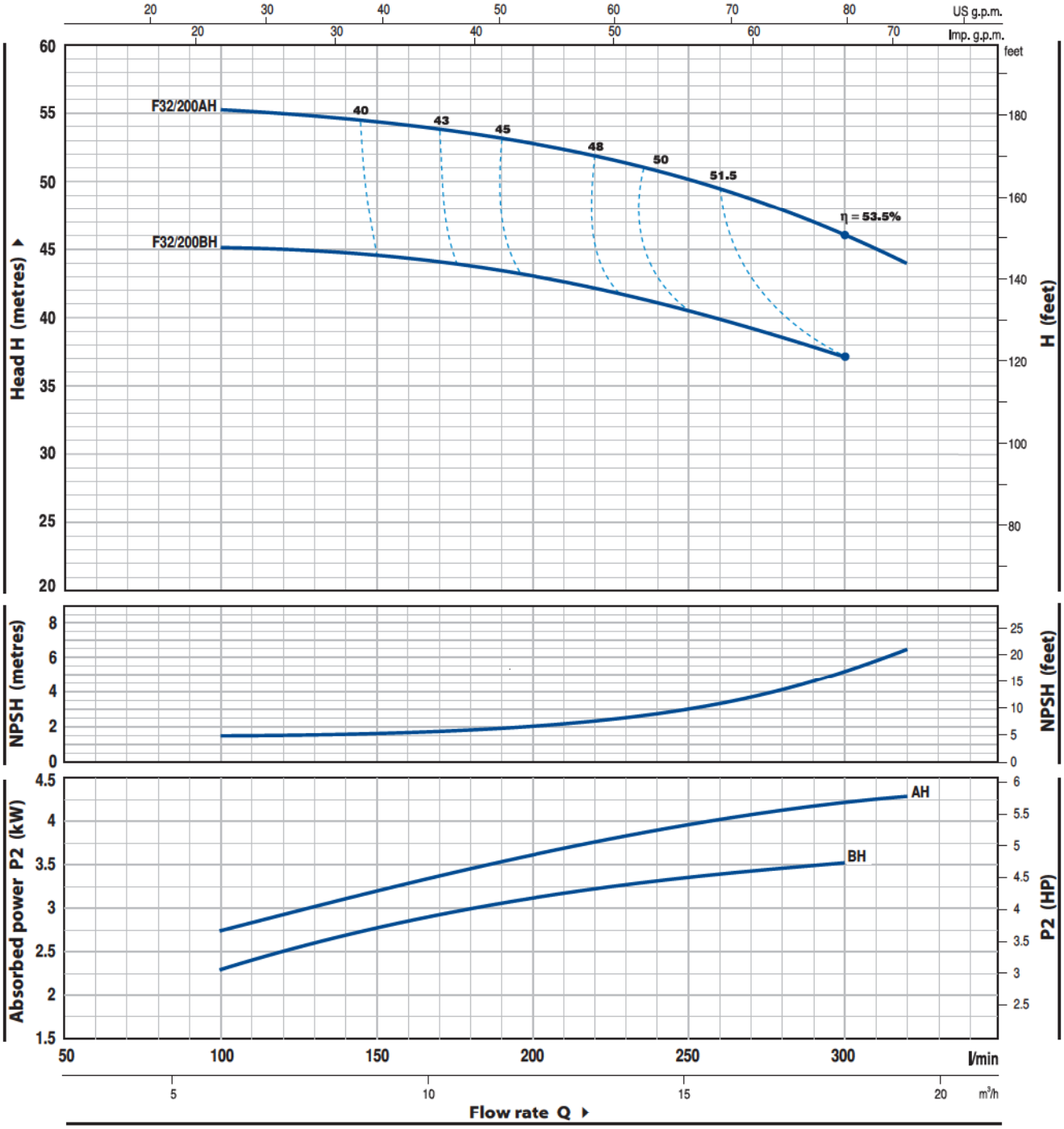

MODEL	POWER		Q	m³/h	0	6	9	12	15	18	19.2
Three-phase	kW	HP		l/min	**0**	**100**	**150**	**200**	**250**	**300**	**320**
F 32/200BH	3	4	H	metres	47	45	44.5	43	40.5	37	
F 32/200AH	4	5.5			57	55	54	52.5	50	46	44

Q = Flow rate **H** = Total manometric head **HS** = Suction height

Tolerance of characteristic curves in compliance with EN ISO 9906 App. A.

CHARACTERISTIC CURVES AND PERFORMANCE DATA

50 Hz n= 2900 1/min HS= 0 m

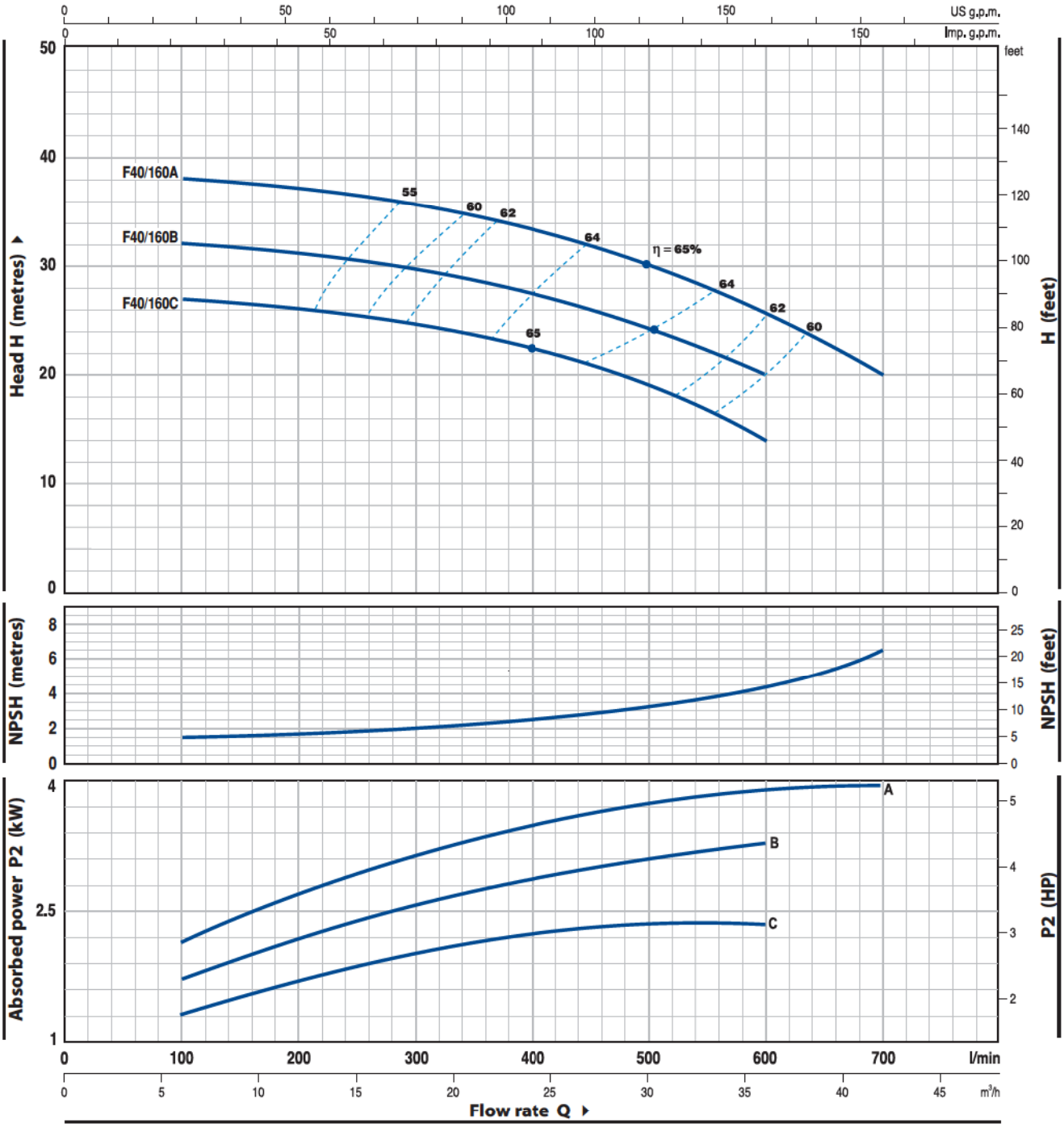

MODEL		POWER		Q m³/h	0	6	9	12	15	18	24	30	36	42
Single-phase	Three-phase	kW	HP	Q l/min	**0**	**100**	**150**	**200**	**250**	**300**	**400**	**500**	**600**	**700**
Fm 40/160C	**F 40/160C**	2.2	3	H metres	27	27	26.5	26	25.5	25	22.5	19	14	
–	**F 40/160B**	3	4		32	32	31.5	31	30.5	30	27.5	24	20	
–	**F 40/160A**	4	5.5		38	38	37.8	37	36.5	36	33.5	30	26	20

Q = Flow rate **H** = Total manometric head **HS** = Suction height

Tolerance of characteristic curves in compliance with EN ISO 9906 App. A.

F40/200

CHARACTERISTIC CURVES AND PERFORMANCE DATA

50 Hz n= 2900 1/min HS= 0 m

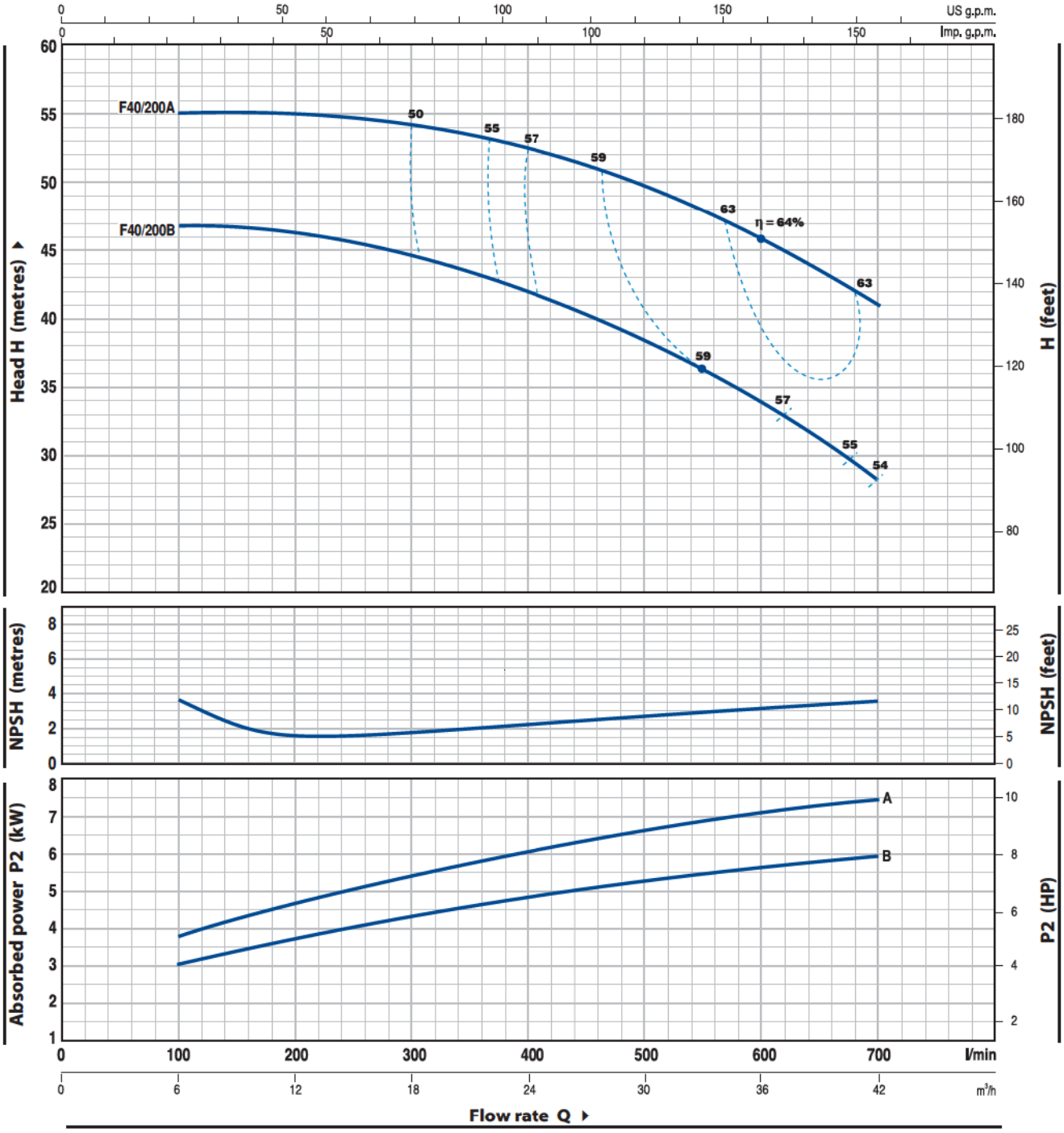

MODEL	POWER		Q m³/h	0	6	9	12	15	18	24	30	36	42
Three-phase	kW	HP	Q l/min	**0**	**100**	**150**	**200**	**250**	**300**	**400**	**500**	**600**	**700**
F 40/200B	5.5	7.5	H metres	48	47	46.5	46	45.5	44.5	42	38	34	28
F 40/200A	7.5	10		56	55	55	55	54.5	54	52.5	49.5	46	41

Q = Flow rate **H** = Total manometric head **HS** = Suction height

Tolerance of characteristic curves in compliance with EN ISO 9906 App. A.

CHARACTERISTIC CURVES AND PERFORMANCE DATA

50 Hz n= 2900 1/min HS= 0 m

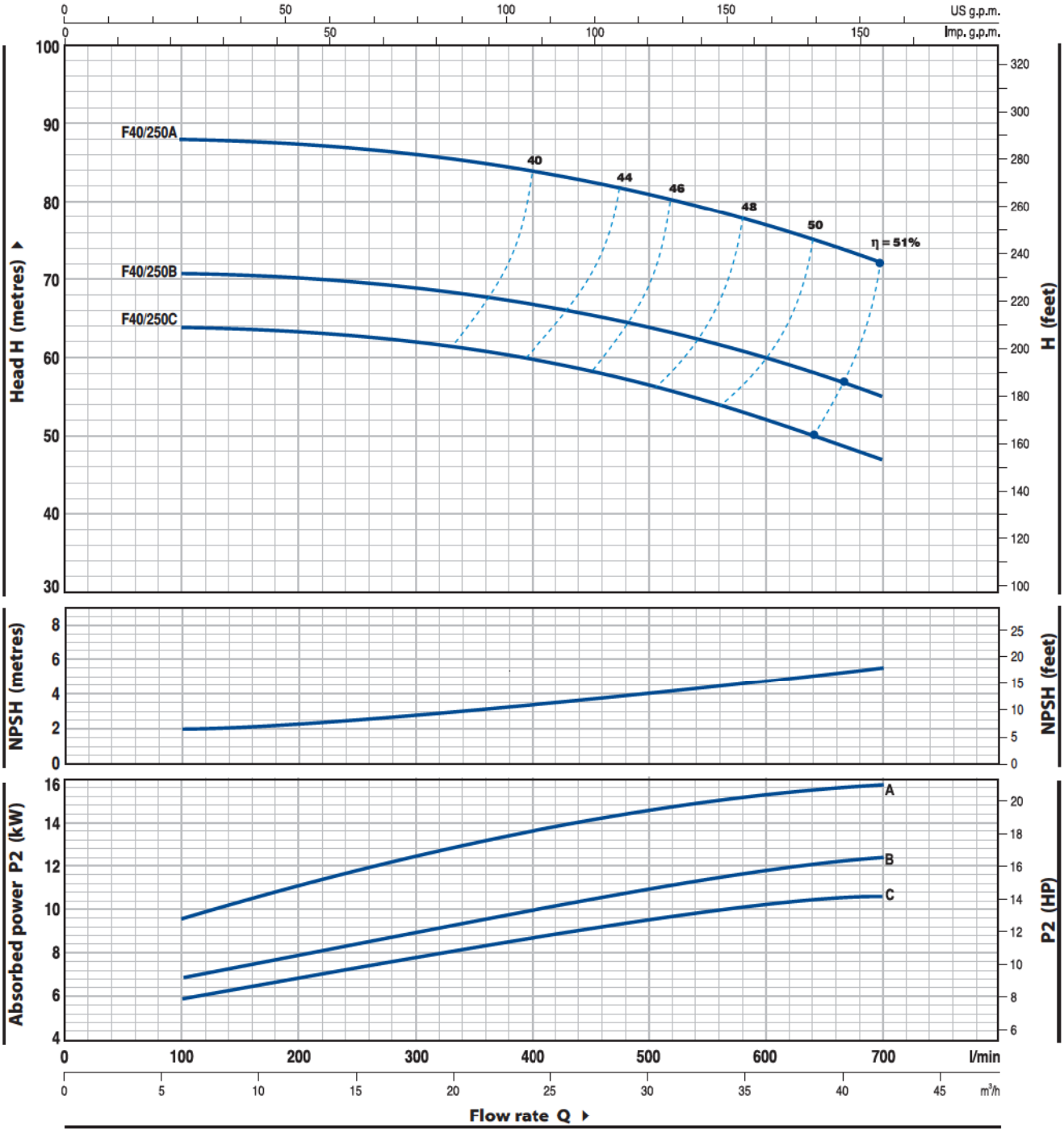

MODEL	POWER		Q m³/h	0	6	9	12	15	18	24	30	36	42
Three-phase	kW	HP	l/min	**0**	**100**	**150**	**200**	**250**	**300**	**400**	**500**	**600**	**700**
F 40/250C	9.2	12.5		64	64	63.5	63	62.5	62	60	56.5	52.5	47
F 40/250B	11	15	**H** metres	71	71	70.5	70	69.5	69	67	64	60	55
F 40/250A	15	20		88	88	87.5	87	86.5	86	84	81	77	72

Q = Flow rate **H** = Total manometric head **HS** = Suction height

Tolerance of characteristic curves in compliance with EN ISO 9906 App. A.

F50/125

CHARACTERISTIC CURVES AND PERFORMANCE DATA

50 Hz n= 2900 1/min HS= 0 m

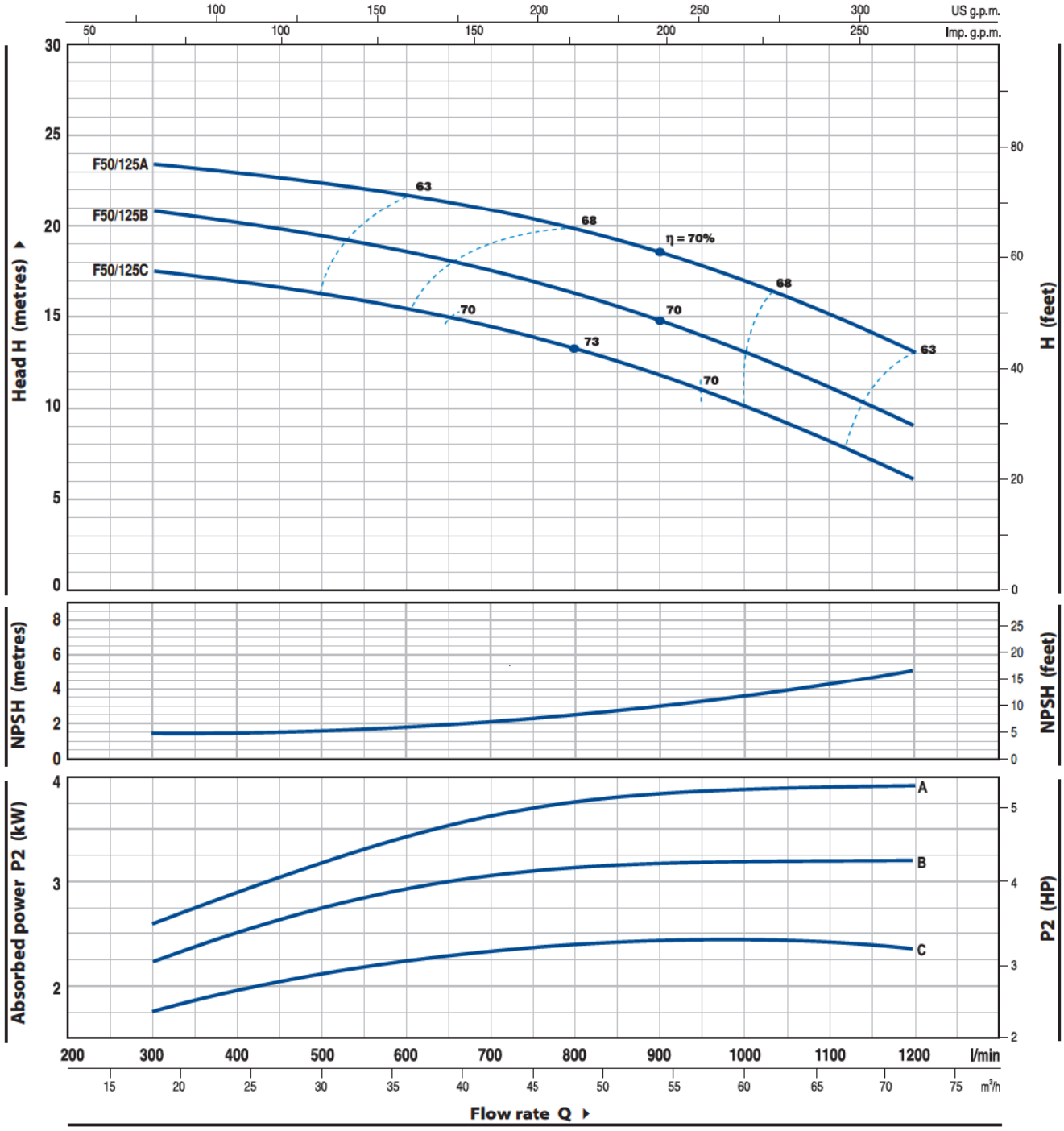

MODEL		POWER		Q m³/h	0	18	24	30	36	42	48	54	60	66	72
Single-phase	Three-phase	kW	HP	Q l/min	**0**	**300**	**400**	**500**	**600**	**700**	**800**	**900**	**1000**	**1100**	**1200**
Fm 50/125C	**F 50/125C**	2.2	3	H metres	18.5	17.5	17	16.5	15.5	14.8	13.5	12	10.5	8.2	6
–	**F 50/125B**	3	4		21.5	20.7	20	19.5	18.8	17.8	16.5	15	13.5	11.2	9
–	**F 50/125A**	4	5.5		24.5	23.5	23	22.5	21.8	20.8	19.5	18.3	16.8	15	13

Q = Flow rate **H** = Total manometric head **HS** = Suction height

Tolerance of characteristic curves in compliance with EN ISO 9906 App. A.

PEDROLLO ... the spring of life

CHARACTERISTIC CURVES AND PERFORMANCE DATA

50 Hz n= 2900 1/min HS= 0 m

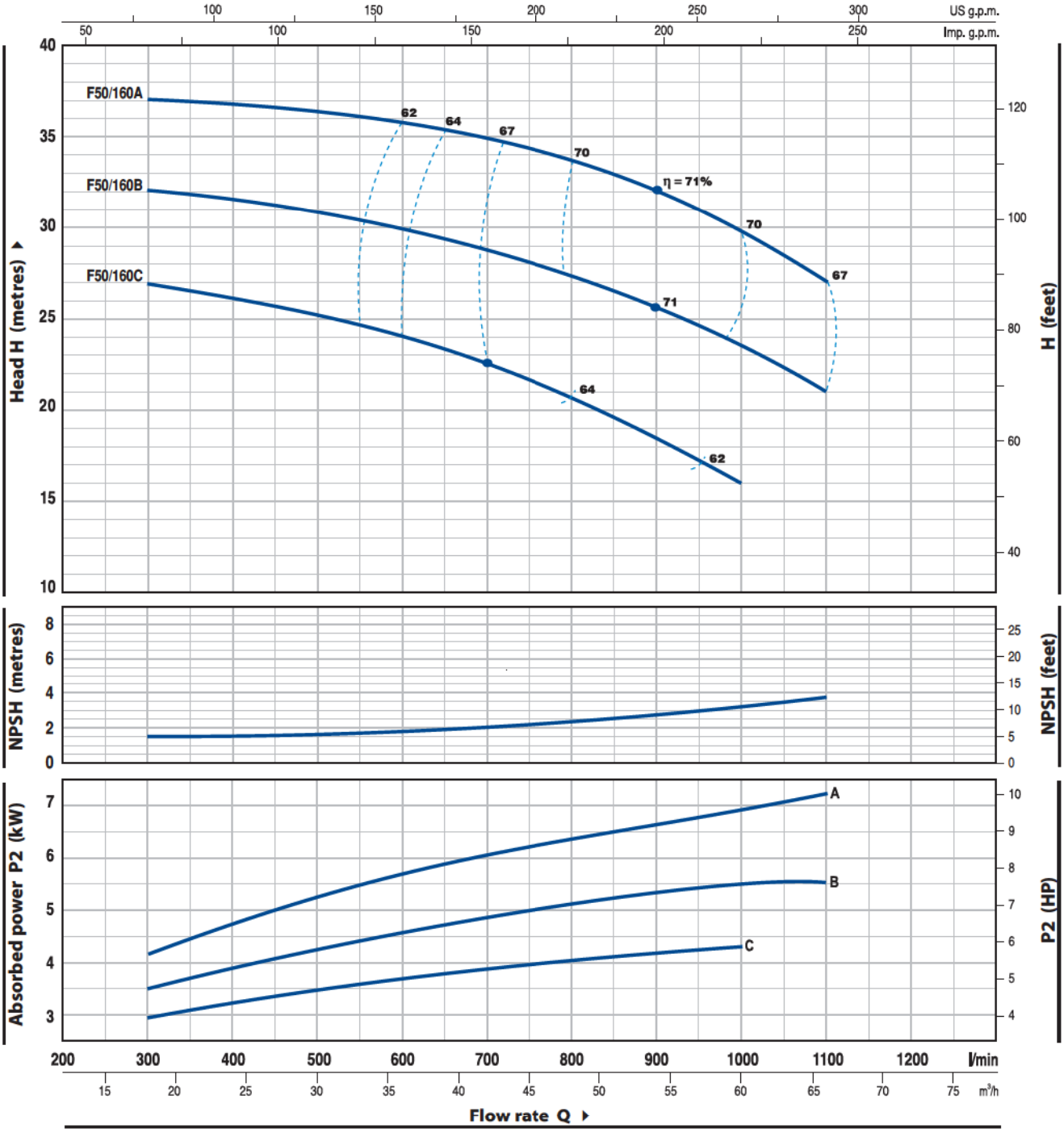

MODEL	POWER		Q m³/h	0	18	24	30	36	42	48	54	60	66
Three-phase	kW	HP	Q l/min	**0**	**300**	**400**	**500**	**600**	**700**	**800**	**900**	**1000**	**1100**
F 50/160C	4	5.5		27	27	26.5	25	24.5	23	20	18.5	16	
F 50/160B	5.5	7.5	H metres	33	32	31.7	31	30	29	27	26	24	21
F 50/160A	7.5	10		38	37	36.8	36.5	36	34	33	32	30	27

Q = Flow rate **H** = Total manometric head **HS** = Suction height

Tolerance of characteristic curves in compliance with EN ISO 9906 App. A.

F 50/200

CHARACTERISTIC CURVES AND PERFORMANCE DATA

50 Hz n= 2900 1/min HS= 0 m

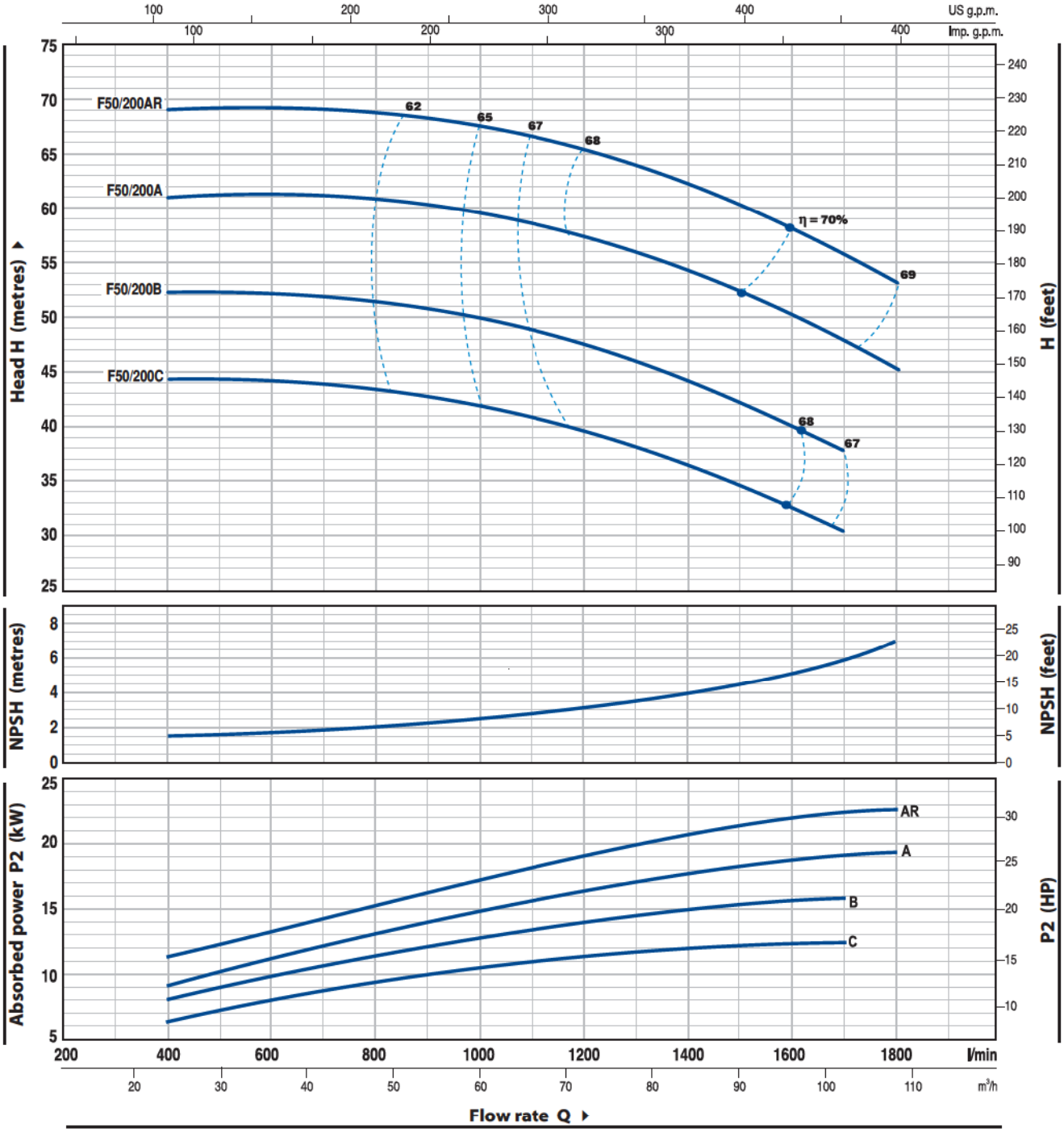

MODEL	POWER		Q m³/h	24	36	48	60	72	84	96	102	108
Three-phase	kW	HP	Q l/min	**400**	**600**	**800**	**1000**	**1200**	**1400**	**1600**	**1700**	**1800**
F 50/200C	11	15	H metres	44	44	44	42	39	36	33	30	
F 50/200B	15	20		52	52	52	50	47	44	40	38	
F 50/200A	18.5	25		61	61	60.5	60	57	54	50	48	45
F 50/200AR	22	30		69	69	68.5	68	65	62	58	56	53

Q = Flow rate **H** = Total manometric head **HS** = Suction height

Tolerance of characteristic curves in compliance with EN ISO 9906 App. A.

CHARACTERISTIC CURVES AND PERFORMANCE DATA

50 Hz n= 2900 1/min HS= 0 m

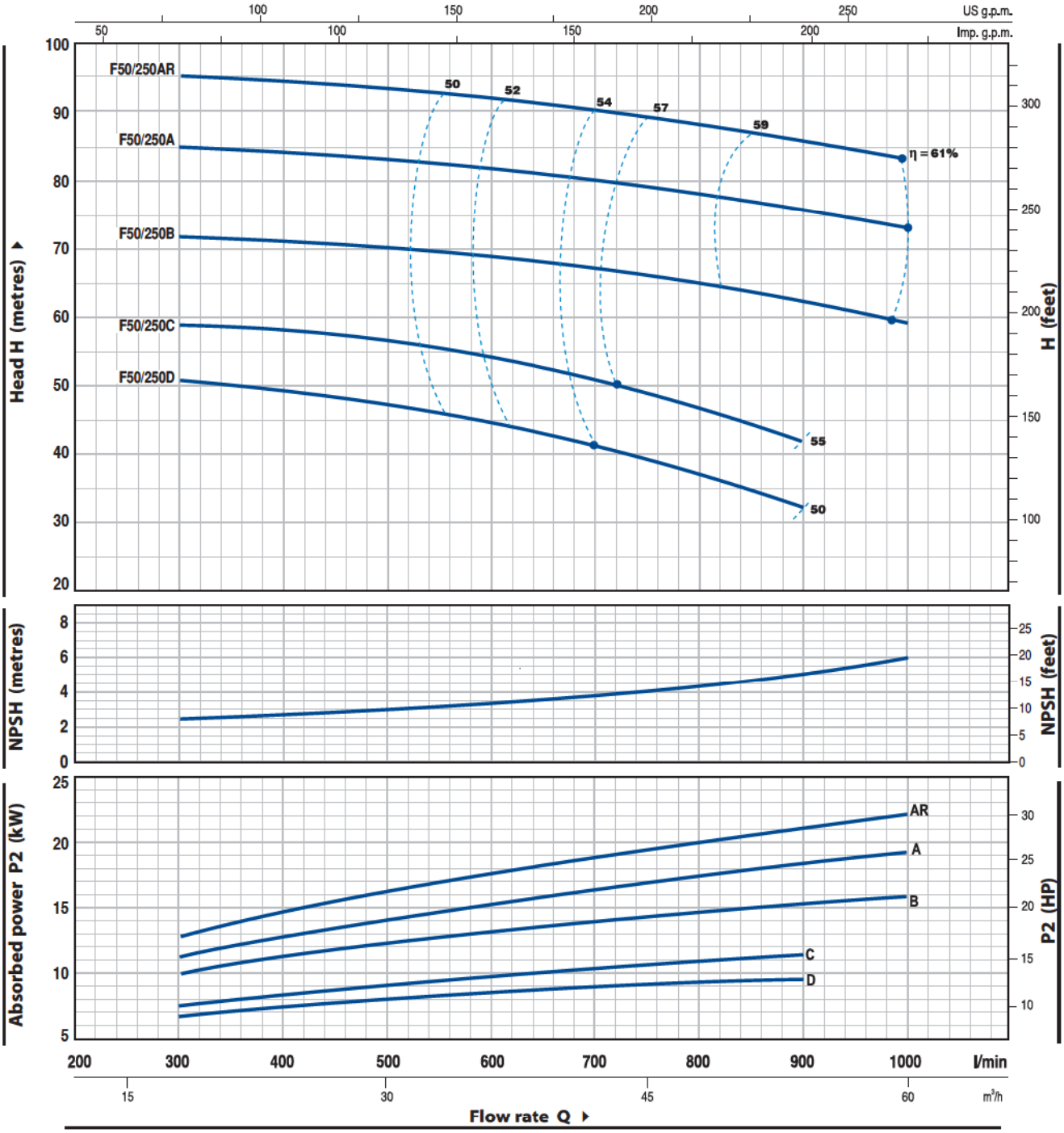

MODEL	POWER		Q m³/h	0	18	24	30	36	42	48	54	60
Three-phase	kW	HP	l/min	**0**	**300**	**400**	**500**	**600**	**700**	**800**	**900**	**1000**
F 50/250D	9.2	12.5		51	51	49	47	44	41	37	32	
F 50/250C	11	15		59	59	58	57	54	51	47	42	
F 50/250B	15	20	**H** metres	72	72	71	70	69	67	65	62	59
F 50/250A	18.5	25		85	85	84	83	82	80	78	76	73
F 50/250AR	22	30		95	95	94	93	92	90	88	86	83

Q = Flow rate **H** = Total manometric head **HS** = Suction height

Tolerance of characteristic curves in compliance with EN ISO 9906 App. A.

F65/125

CHARACTERISTIC CURVES AND PERFORMANCE DATA

50 Hz n= 2900 1/min HS= 0 m

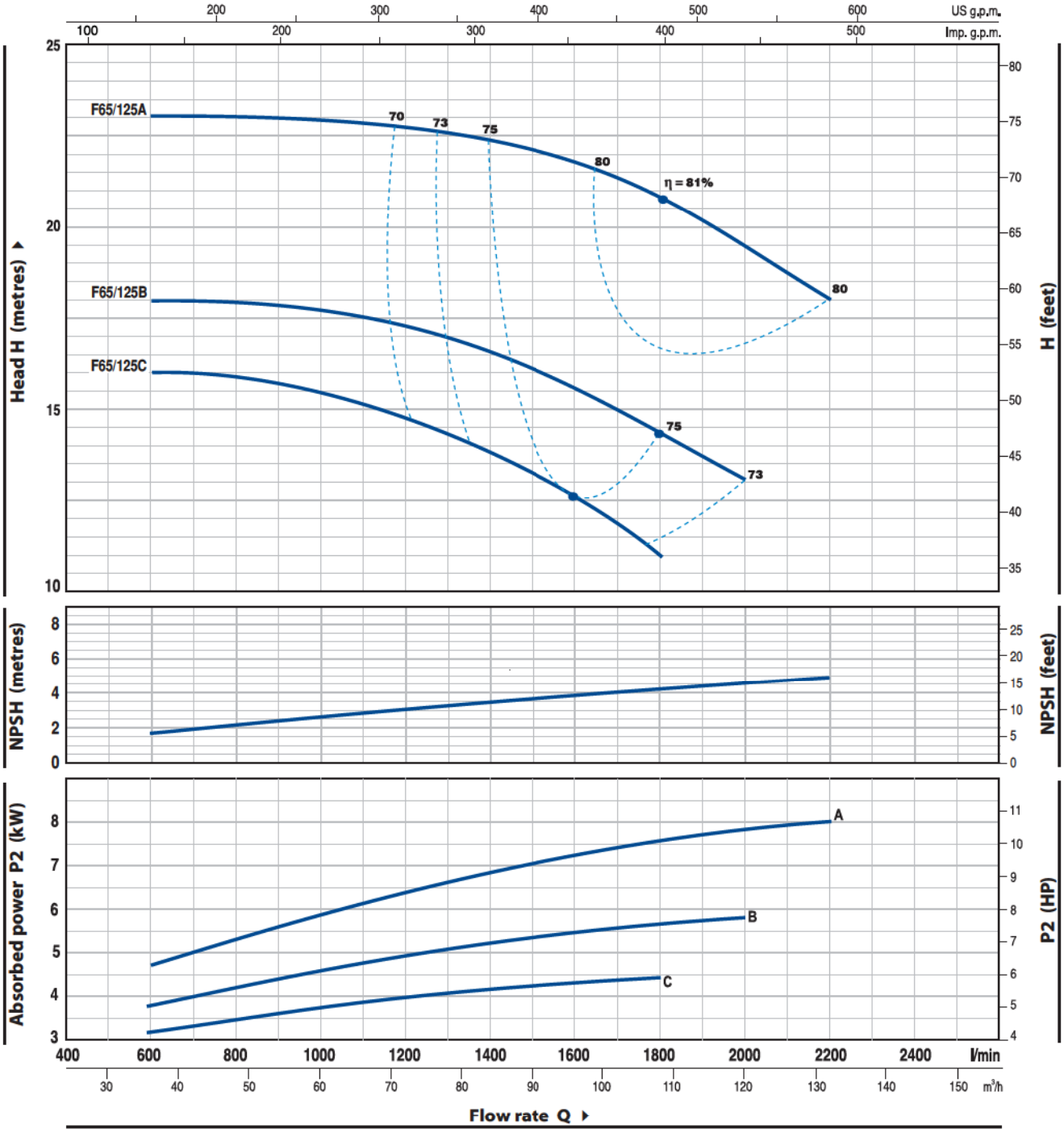

MODEL	POWER		Q m³/h	0	36	48	60	72	84	96	108	120	132
Three-phase	kW	HP	Q l/min	**0**	**600**	**800**	**1000**	**1200**	**1400**	**1600**	**1800**	**2000**	**2200**
F 65/125C	4	5.5		16	16	16	15.5	14.5	13.5	12.5	11		
F 65/125B	5.5	7.5	**H** metres	18	18	18	18	17	16.5	15.5	14.5	13	
F 65/125A	7.5	10		23	23	23	23	22.5	22.5	22	21	19.5	18

Q = Flow rate **H** = Total manometric head **HS** = Suction height

Tolerance of characteristic curves in compliance with EN ISO 9906 App. A.

CHARACTERISTIC CURVES AND PERFORMANCE DATA

50 Hz n= 2900 1/min HS= 0 m

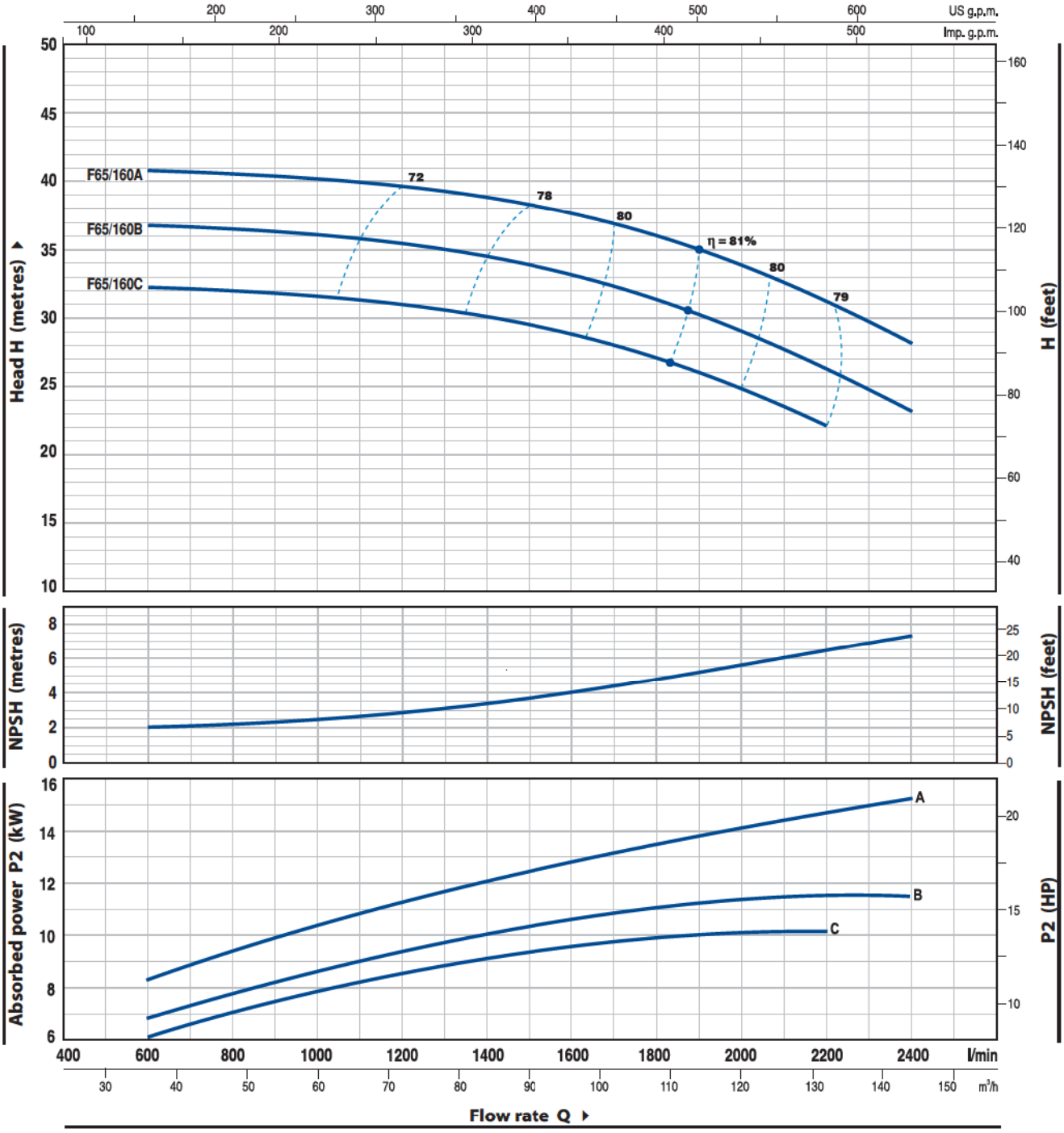

MODEL	POWER		Q m³/h	0	36	48	60	72	84	96	108	120	132	144
Three-phase	kW	HP	Q l/min	**0**	**600**	**800**	**1000**	**1200**	**1400**	**1600**	**1800**	**2000**	**2200**	**2400**
F 65/160C	9.2	12.5		32	32	32	32	32	30	29	27	25	22	
F 65/160B	11	15	**H** metres	37	36.5	36.5	36	35.5	34	33	31	29	26	23
F 65/160A	15	20		41	40.5	40.5	40	39.5	39	37.5	36	34	31	28

Q = Flow rate **H** = Total manometric head **HS** = Suction height

Tolerance of characteristic curves in compliance with EN ISO 9906 App. A.

F65/200

CHARACTERISTIC CURVES AND PERFORMANCE DATA

50 Hz n= 2900 1/min HS= 0 m

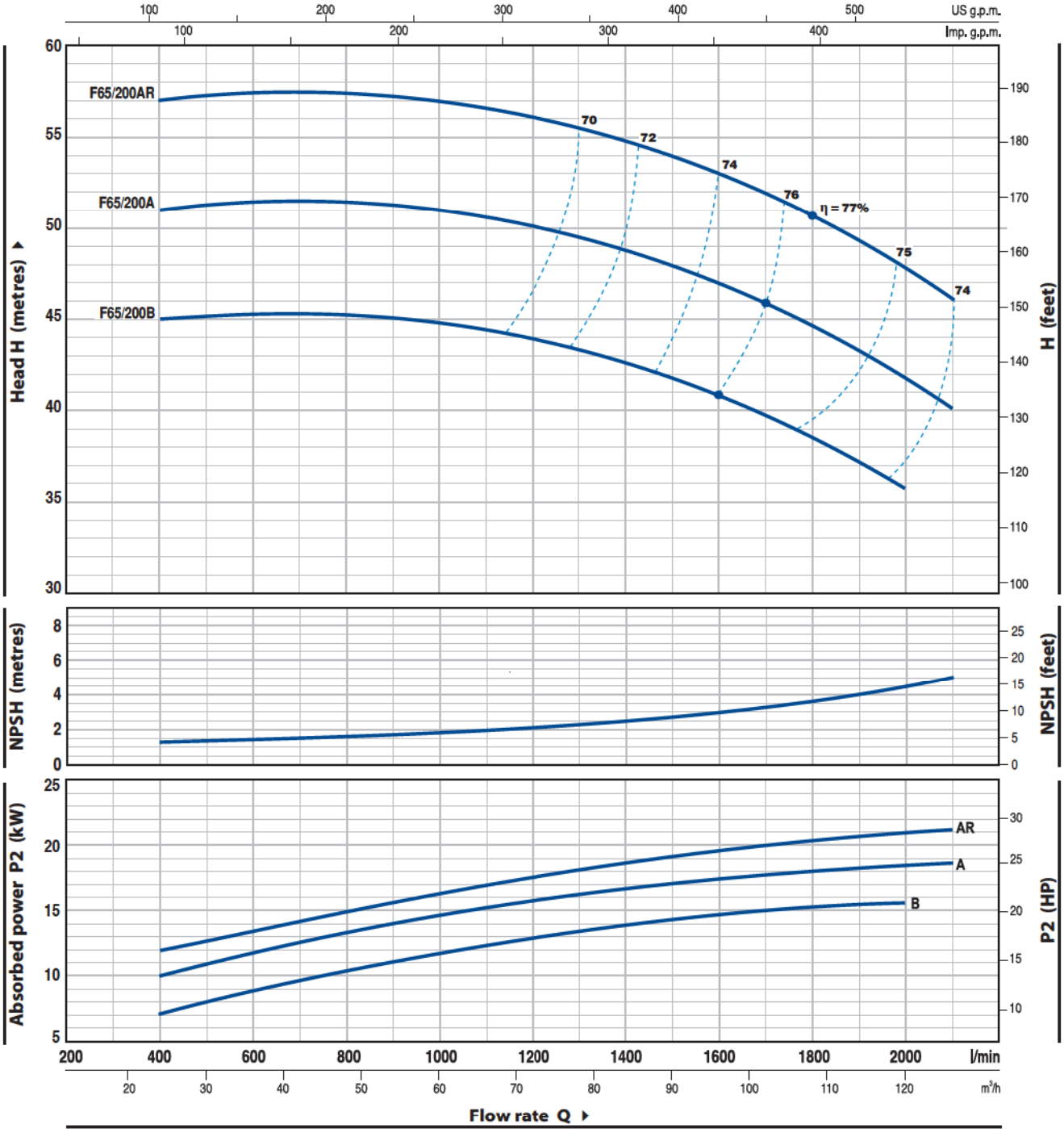

MODEL	POWER		Q m³/h	24	36	48	60	72	84	96	108	120	126
Three-phase	kW	HP	Q l/min	**400**	**600**	**800**	**1000**	**1200**	**1400**	**1600**	**1800**	**2000**	**2100**
F 65/200B	15	20		45	45	45	45	44	42.5	41	38.5	35.5	
F 65/200A	18.5	25	**H** metres	51	51	51	51	50	49	47	44.5	41.5	40
F 65/200AR	22	30		57	57	57	57	56	55	53	50.5	47.5	46

Q = Flow rate **H** = Total manometric head **HS** = Suction height

Tolerance of characteristic curves in compliance with EN ISO 9906 App. A.

CHARACTERISTIC CURVES AND PERFORMANCE DATA

50 Hz n= 2900 1/min HS= 0 m

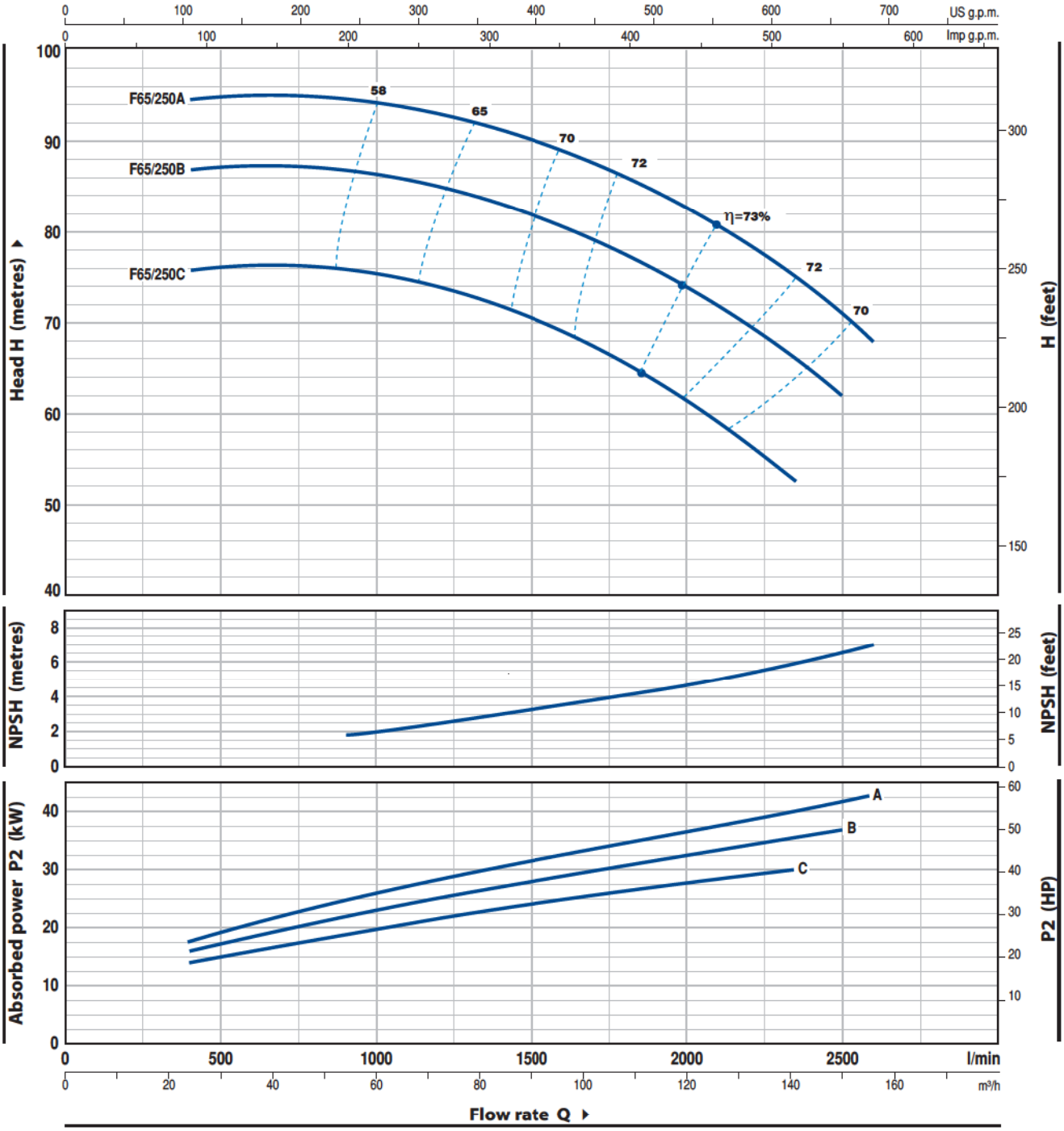

MODEL	POWER		Q m³/h	24	40	60	80	100	120	141	150	156
Three-phase	kW	HP	Q l/min	**400**	**667**	**1000**	**1333**	**1667**	**2000**	**2350**	**2500**	**2600**
F 65/250C	30	40		76	76	75.5	72.5	68	61.5	53		
F 65/250B	37	50	**H** metres	87	87	86	84	80	74	66.5	62	
F 65/250A	45	60		94.5	95	94	92	88	82.5	75	71	68

Q = Flow rate **H** = Total manometric head **HS** = Suction height

Tolerance of characteristic curves in compliance with EN ISO 9906 App. A.

F80/160

CHARACTERISTIC CURVES AND PERFORMANCE DATA

50 Hz n= 2900 1/min HS= 0 m

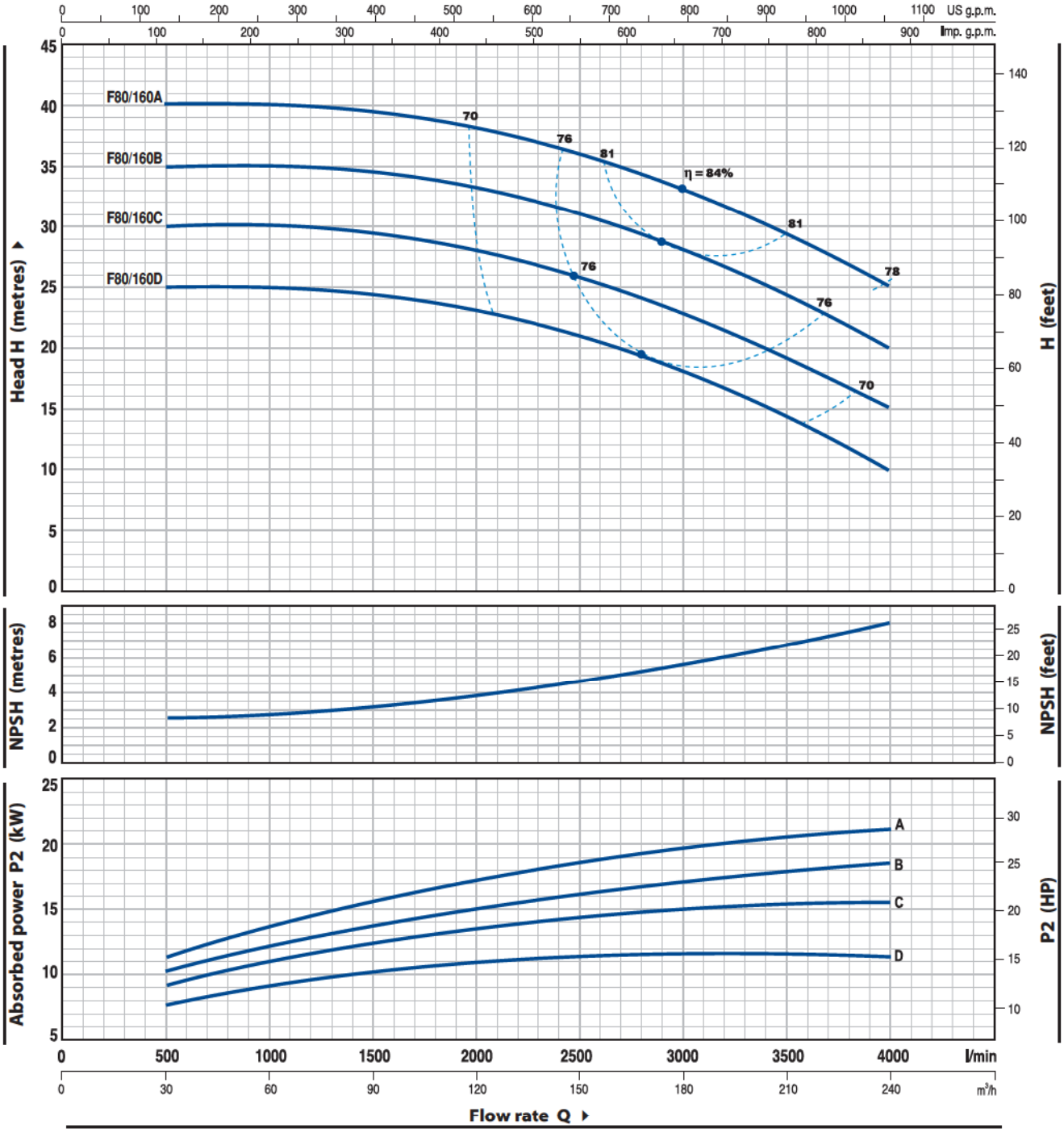

MODEL	POWER		Q m³/h	0	30	60	90	120	150	180	210	240
Three-phase	kW	HP	Q l/min	0	500	1000	1500	2000	2500	3000	3500	4000
F 80/160D	11	15	H metres	25	25	25	24.5	23.5	21	18	14.5	10
F 80/160C	15	20		30	30	30	29.5	28.5	26	23	19.5	15
F 80/160B	18.5	25		35	35	35	34.5	33.5	31	28.5	24.5	20
F 80/160A	22	30		40	40	40	39.5	38.5	36	33	29.5	25

Q = Flow rate **H** = Total manometric head **HS** = Suction height

Tolerance of characteristic curves in compliance with EN ISO 9906 App. A.

CHARACTERISTIC CURVES AND PERFORMANCE DATA

50 Hz n= 2900 1/min HS= 0 m

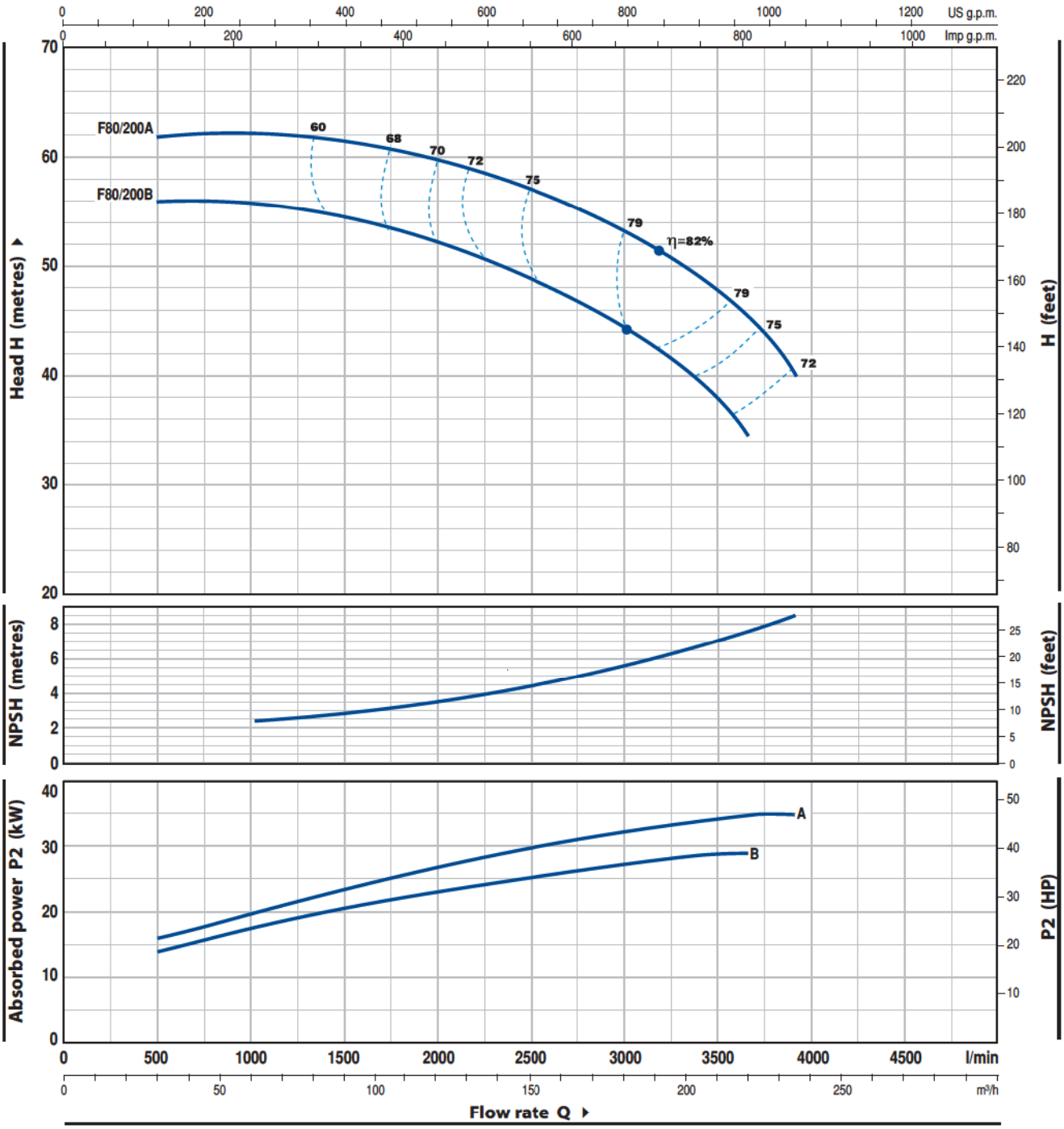

MODEL	POWER		Q m³/h	30	50	100	150	200	219	234
Three-phase	kW	HP	Q l/min	**500**	**833**	**1667**	**2500**	**3333**	**3650**	**3900**
F 80/200B	30	40	H metres	56	56	54	49	41	34.5	
F 80/200A	37	50		62	62	61	57	50	45.5	40

Q = Flow rate **H** = Total manometric head **HS** = Suction height

Tolerance of characteristic curves in compliance with EN ISO 9906 App. A.

F80/250

CHARACTERISTIC CURVES AND PERFORMANCE DATA

50 Hz n= 2900 1/min HS= 0 m

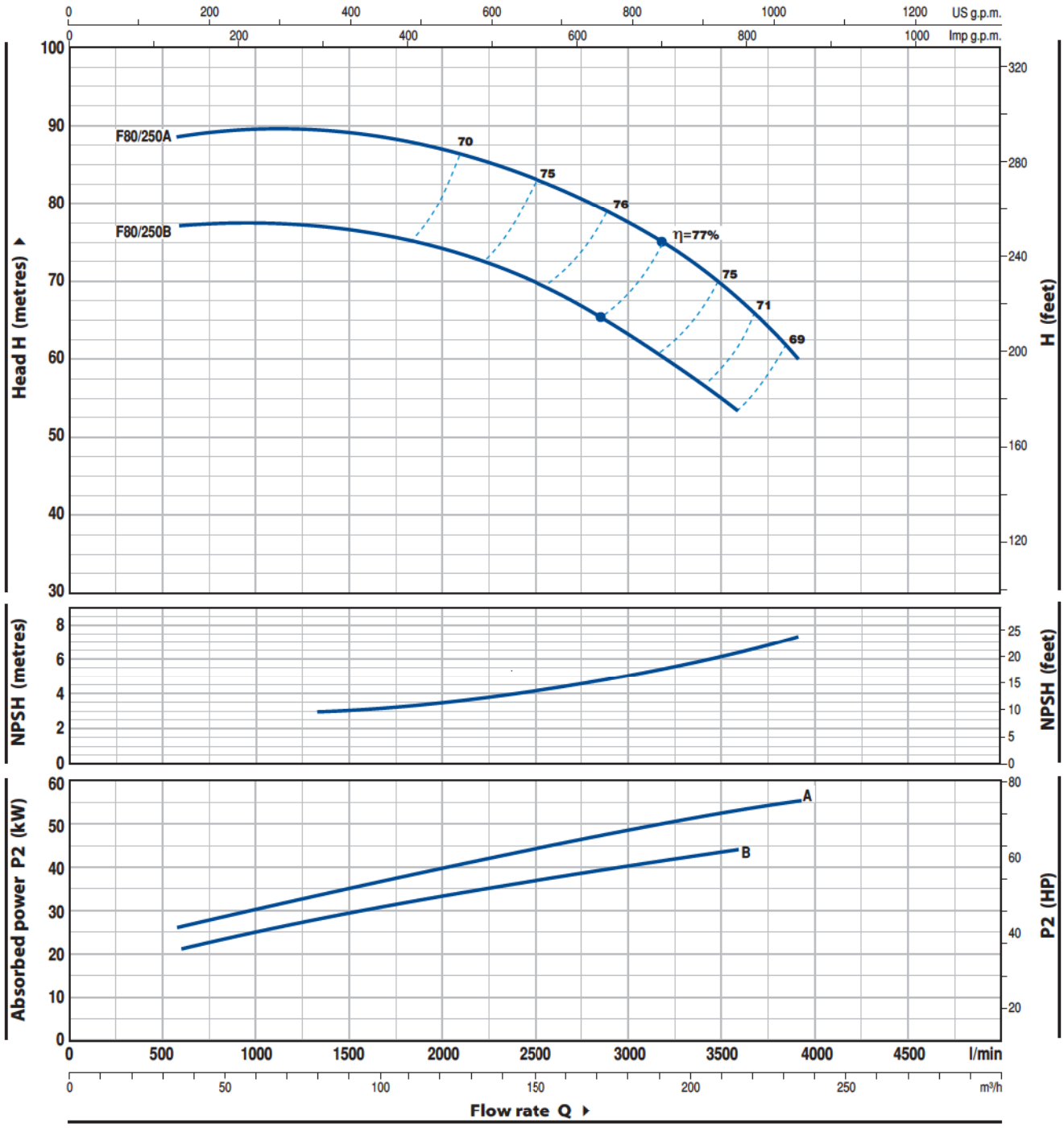

MODEL	POWER		Q m³/h	36	50	100	150	200	216	234
Three-phase	kW	HP	l/min	**600**	**833**	**1667**	**2500**	**3333**	**3600**	**3900**
F 80/250B	45	60	H metres	77	77.5	76	70.5	58.5	54	
F 80/250A	55	75		88.5	89.5	89	83	72	68	60

Q = Flow rate **H** = Total manometric head **HS** = Suction height

Tolerance of characteristic curves in compliance with EN ISO 9906 App. A.

CHARACTERISTIC CURVES AND PERFORMANCE DATA

50 Hz n= 2900 1/min HS= 0 m

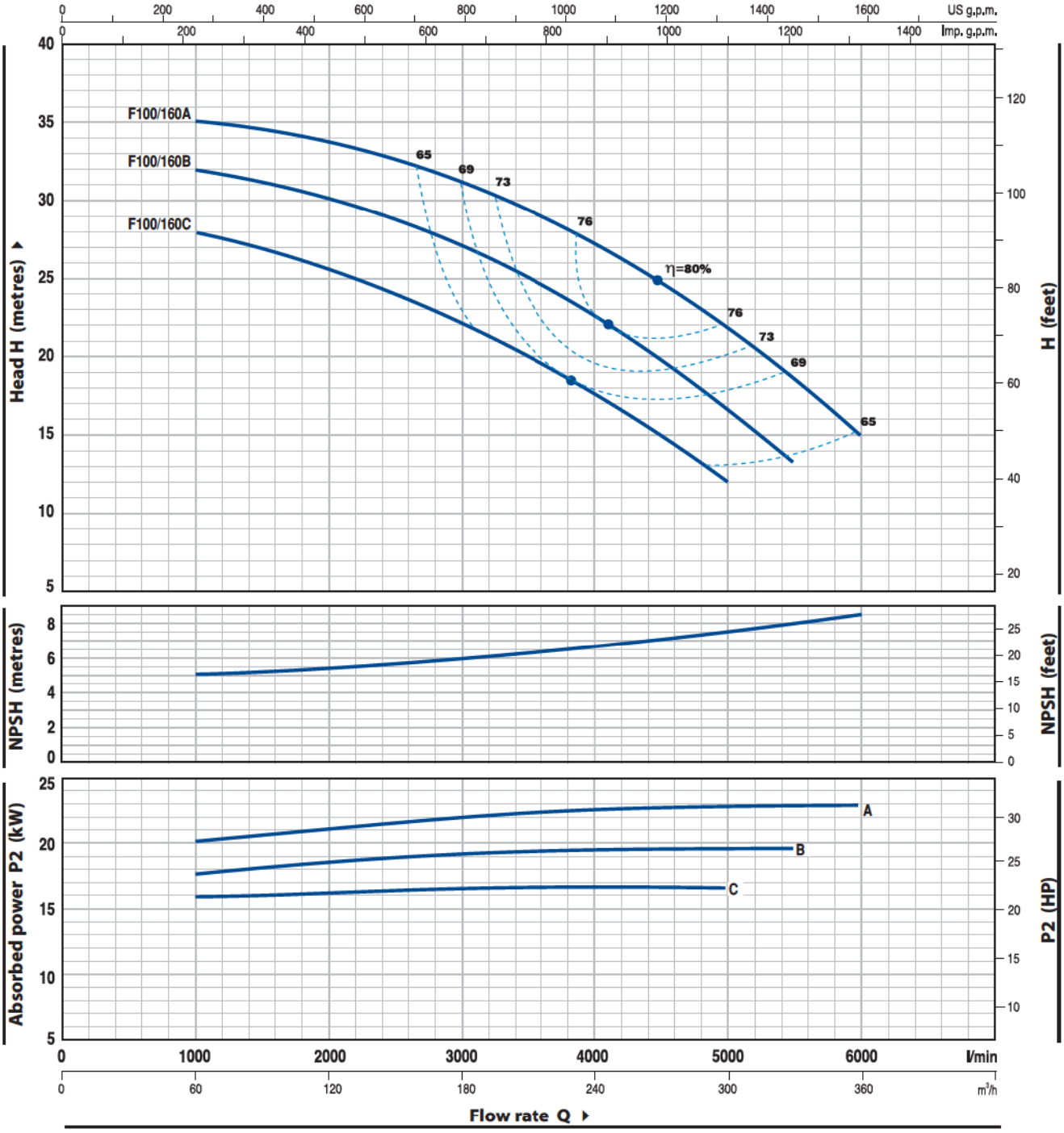

MODEL	POWER		Q m³/h	0	60	120	180	240	270	300	330	360
Three-phase	kW	HP	Q l/min	**0**	**1000**	**2000**	**3000**	**4000**	**4500**	**5000**	**5500**	**6000**
F 100/160C	15	20		28	28	25.5	22	17.5	15	12		
F 100/160B	18.5	25	**H** metres	32	32	30	27	22.5	19.5	17	13	
F 100/160A	22	30		35	35	34	31	27	24.5	22	18	15

Q = Flow rate **H** = Total manometric head **HS** = Suction height

Tolerance of characteristic curves in compliance with EN ISO 9906 App. A.

F100/200

CHARACTERISTIC CURVES AND PERFORMANCE DATA

50 Hz n= 2900 1/min HS= 0 m

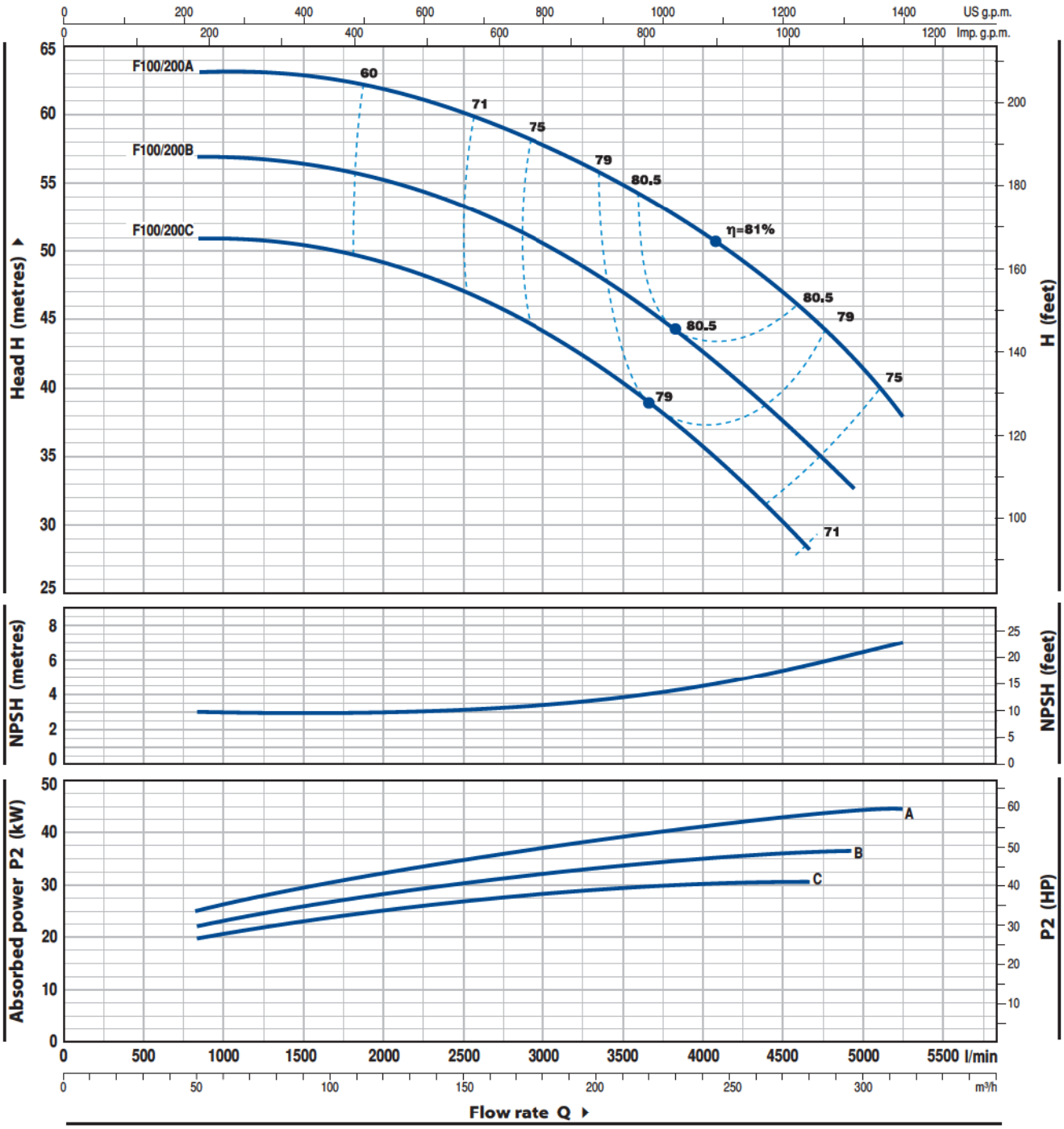

MODEL	POWER		Q m³/h	0	50	100	150	200	250	279	294	300	315
Three-phase	kW	HP	Q l/min	**0**	**833**	**1667**	**2500**	**3333**	**4167**	**4650**	**4900**	**5000**	**5250**
F 100/200C	30	40		51	51	50	47	41.5	34	28			
F 100/200B	37	50	**H** metres	57	57	56	53	48	41	36	33		
F 100/200A	45	60		63	63	62.5	60	56	50	45	42.5	41.5	38

Q = Flow rate **H** = Total manometric head **HS** = Suction height

Tolerance of characteristic curves in compliance with EN ISO 9906 App. A.

CHARACTERISTIC CURVES AND PERFORMANCE DATA

50 Hz n= 2900 1/min HS= 0 m

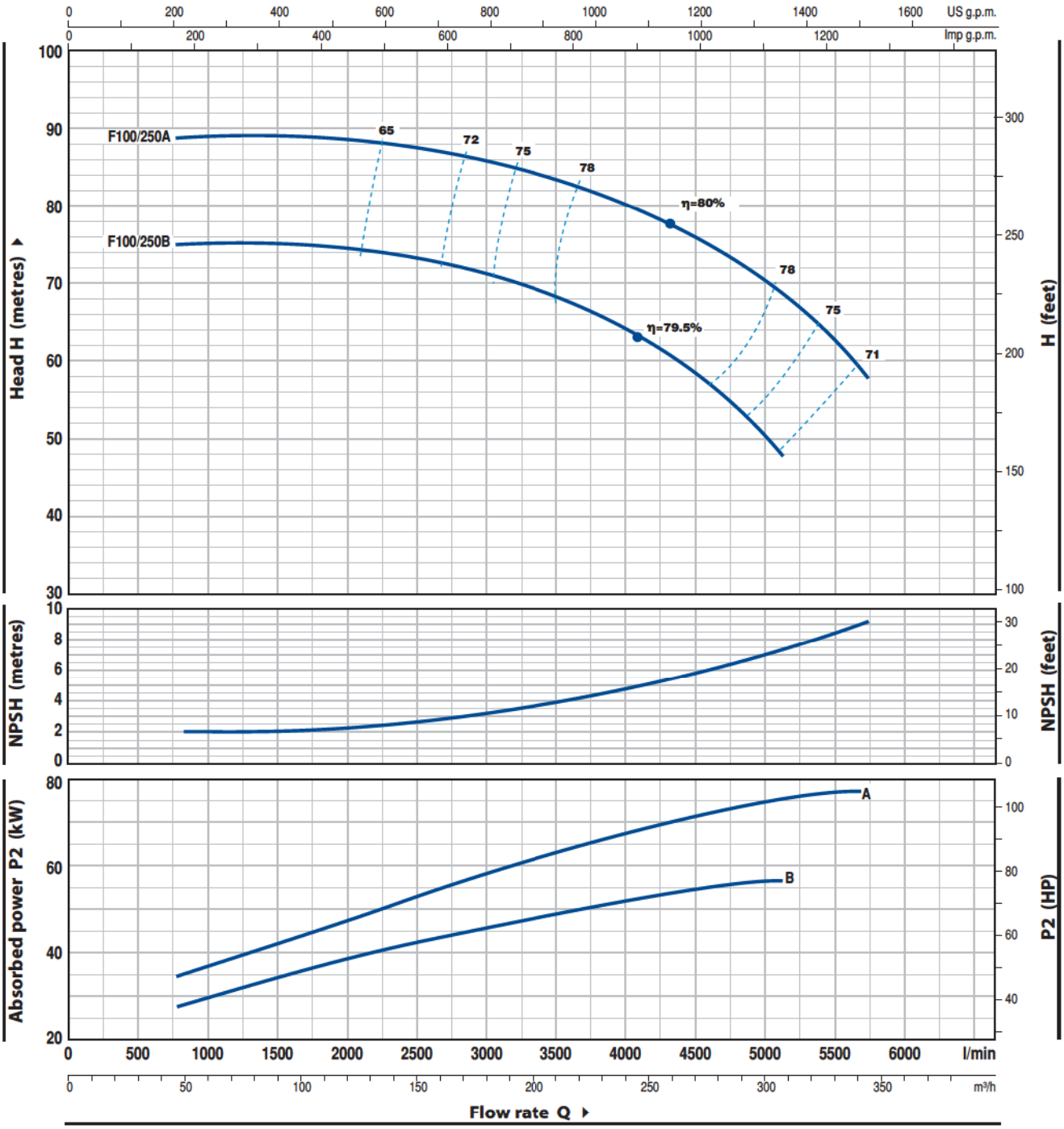

MODEL	POWER		Q m³/h	48	96	150	180	210	240	300	309	345
Three-phase	kW	HP	Q l/min	**800**	**1600**	**2500**	**3000**	**3500**	**4000**	**5000**	**5150**	**5750**
F 100/250B	55	75	H metres	75	75	74	71.5	69	64.5	51	48	
F 100/250A	75	100		89	89	88.5	87	84	80.5	70.5	69	58

Q = Flow rate **H** = Total manometric head **HS** = Suction height

Tolerance of characteristic curves in compliance with EN ISO 9906 App. A.

POS.	COMPONENT	CONSTRUCTION CHARACTERISTICS
1	PUMP BODY	Cast iron, complete with flanged suction and delivery ports
2	COUNTERFLANGES	Steel, complete with ISO 228/1 thread
3a	BODY BACKPLATE	Cast iron
3b	MOTOR BRACKET	Cast iron
4	IMPELLER	Brass for F32/160, F32/200, F40/160, F40/200, F50/125, F50/160 Cast iron for F40/250, F50/200, F50/250, F65/125, F65/160, F65/200, F65/250, F80/160, F80/200, F80/250, F100/160, F100/200, F100/250
5	MOTOR SHAFT	Stainless steel EN 10088-3 - 1.4104

6 MECHANICAL SEAL

Pump		*Seal*	*Shaft*	*Materials*		
Model		*Model*	*Diameter*	*Stationary ring*	*Rotational ring*	*Elastomer*
F32/160 F50/125	F40/160	**FN-20**	**Ø 20** mm	Graphite	Ceramic	NBR
F32/200 F50/160	F40/200 F65/125	**FN-24**	**Ø 24** mm	Graphite	Ceramic	NBR
F50/200 F65/200 F100/160	F65/160 F80/160	**FN-32 NU**	**Ø 32** mm	Graphite	Ceramic	NBR
F40/250	F50/250	**FN-38**	**Ø 38** mm	Graphite	Ceramic	NBR
F65/250 F80/250B	F80/200 F100/200	**FN-40**	**Ø 40** mm	Graphite	Ceramic	NBR
F80/250A	F100/250	**FH-45 NU**	**Ø 45** mm	Graphite	Ceramic	NBR

7 BEARINGS

Pump	*Model*
Fm32/160C F32/160C F32/160B F40/160C F50/125C	**6206 ZZ - C3 / 6204 ZZ**
Fm32/160B F32/160A Fm40/160C F40/160B Fm50/125C F50/125B	**6206 ZZ - C3 / 6205 ZZ**
F40/160A F50/125A	**6306 ZZ - C3 / 6206 ZZ - C3**

Pump	*Model*
F32/200 F40/200 F50/160 F65/125	**6307 ZZ - C3 / 6206 ZZ - C3**
F40/250 F50/200 F50/250 F65/160 F65/200 F80/160 F100/160	**6310 ZZ - C3 / 6308 ZZ - C3**
F65/250 F80/200 F80/250B F100/200	**6312 ZZ - C3 / 6212 ZZ - C3**
F80/250A F100/250	**6314 ZZ - C3 / 6314 ZZ - C3**

8 CAPACITOR

Pump	*Capacitance*
Single-phase	*(230 V or 240 V)*
Fm32/160C	**45** µF 450 VL
Fm32/160B	**70** µF 450 VL
Fm40/160C	**70** µF 450 VL
Fm50/125C	**70** µF 450 VL

9 ELECTRIC MOTOR

Fm: single-phase 230 V - 50 Hz with thermal overload protector built-in to the winding (up to 1.5 kW)
F: three-phase 230/400 V - 50 Hz up to 4 kW
400/690 V - 50 Hz from 5.5 to 75 kW

➡ **Pumps fitted with the three-phase motor option offer IE2 (IEC 60034-30) class high performance**

– Insulation: F class
– Protection: IP 55

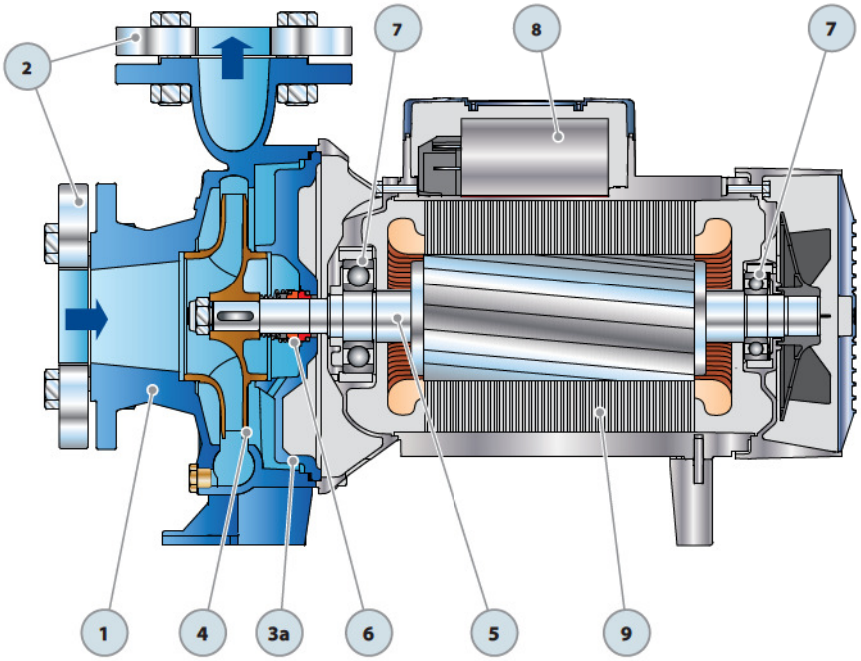

Single-phase version

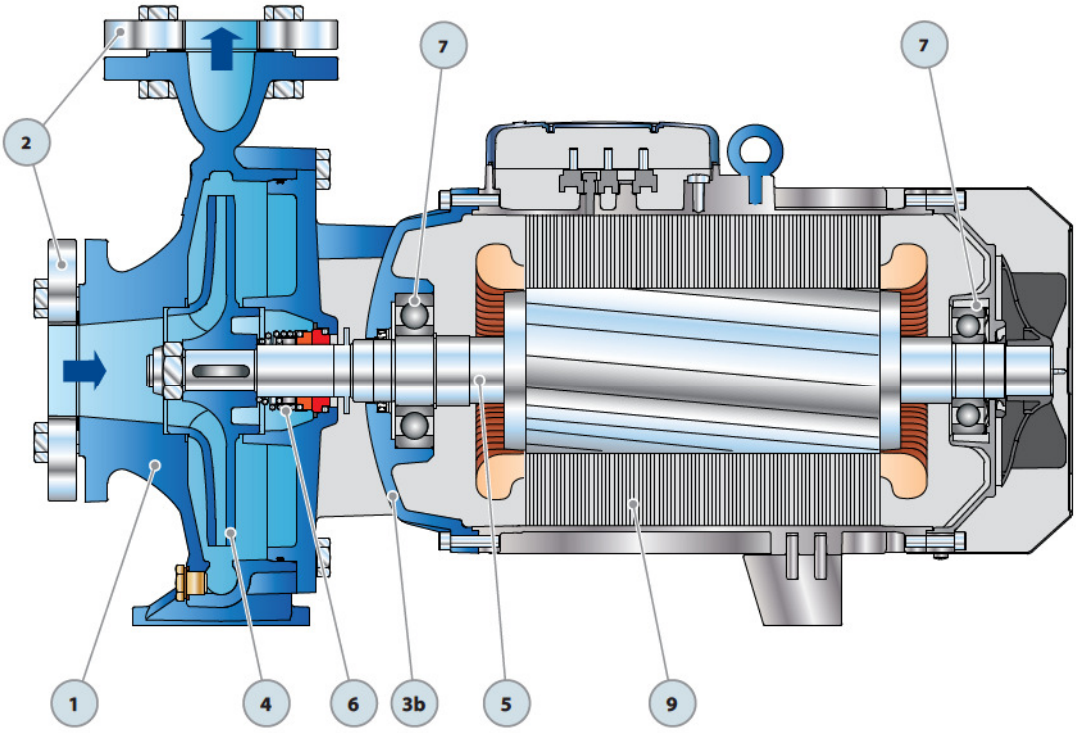

Three-phase version

DIMENSIONS AND WEIGHT

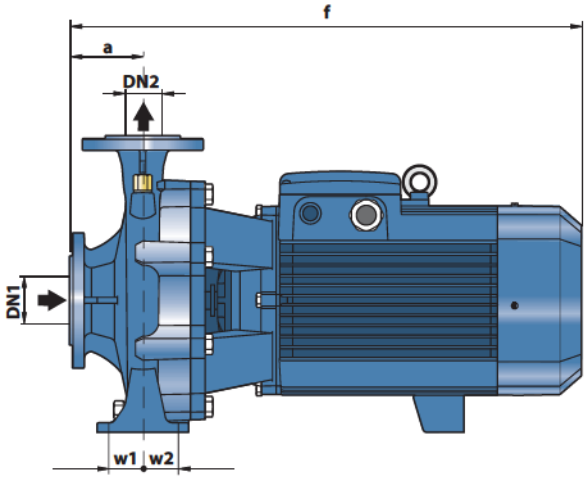

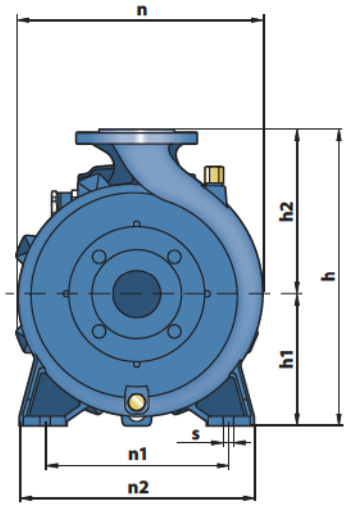

MODEL		PORTS		DIMENSIONS mm											kg *	
Single-phase	Three-phase	DN1	DN2	a	f	h	h1	h2	n	n1	n2	w1	w2	s	1~	3~
Fm 32/160C	F 32/160C	50	32	80	412	292	132	160	242	190	240	35	35	14	39.2	37.0
Fm 32/160B	F 32/160B														42.6	38.5
–	F 32/160A				431										–	42.6
–	F 32/200C				469	340	160	180	270						–	52.0
–	F 32/200B				515										–	57.0
–	F 32/200A														–	61.0
–	F 32/200BH				469										–	47.9
–	F 32/200AH														–	51.1
Fm 40/160C	F 40/160C	65	40		412	292	132	160	240						43.9	40.0
–	F 40/160B				431										–	44.0
–	F 40/160A				465										–	50.1
–	F 40/200B			100	535	340	160	180	275	212	265				–	61.0
–	F 40/200A														–	67.0
–	F 40/250C				606	405	180	225	328	250	320	47.5	47.5		–	103.0
–	F 40/250B														–	109.0
–	F 40/250A				701										–	125.0
Fm 50/125C	F 50/125C	65	50		431	292	132	160	242	190	240	35	35		44.2	40.1
–	F 50/125B				450										–	44.1
–	F 50/125A				484										–	50.7
–	F 50/160C				489	340	160	180	269	212	265				–	55.0
–	F 50/160B				535										–	60.6
–	F 50/160A														–	64.7
–	F 50/200C				616	360		200	316						–	106.0
–	F 50/200B				711										–	128.0
–	F 50/200A														–	135.0
–	F 50/200AR				743										–	147.0
–	F 50/250D				606	405	180	225	337	250	320	47.5	47.5		–	106.0
–	F 50/250C														–	113.4
–	F 50/250B				701										–	129.6
–	F 50/250A														–	146.0
–	F 50/250AR				733										–	155.0
–	F 65/125C	80	65		511	340	160	180	291	212	280				–	62.7
–	F 65/125B				557										–	66.8
–	F 65/125A														–	74.0
–	F 65/160C				621	360		200	300						–	100.0
–	F 65/160B														–	106.5
–	F 65/160A				716										–	123.0
–	F 65/200B				719	405	180	225	340	250	320				–	128.0
–	F 65/200A														–	125.0
–	F 65/200AR				751										–	153.1
–	F 80/160D	100	80	125	652				330						–	111.5
–	F 80/160C				747										–	126.0
–	F 80/160B														–	143.5
–	F 80/160A				779										–	153.0
–	F 100/160C	125	100		758	480	200	280	362	280	360	60	60	18	–	139.0
–	F 100/160B														–	153.7
–	F 100/160A				790										–	165.0

(*weight includes counterflanges)

DIMENSIONS AND WEIGHT

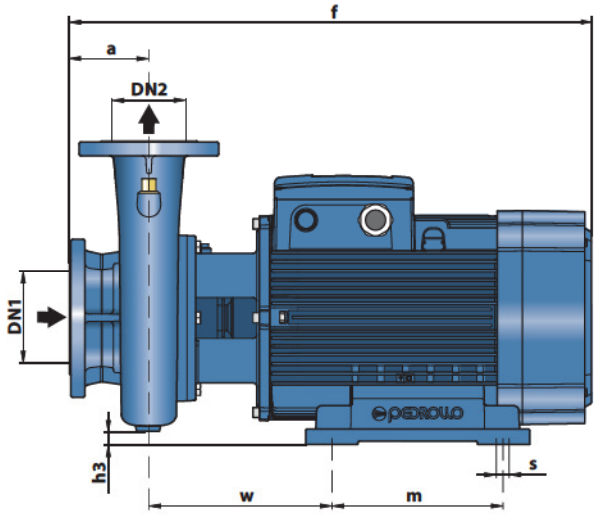

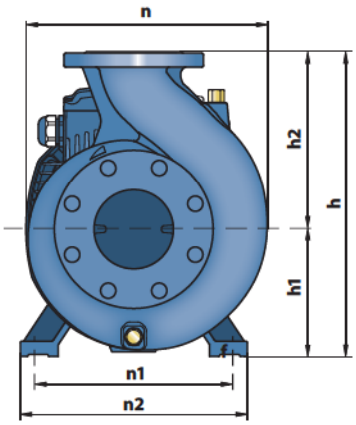

DN FLANGES	D mm	K mm	HOLES N°	HOLES Ø (mm)
32	140	100	4	18
40	150	110		
50	165	125		
65	185	145		
80	200	160	8	
100	220	180		
125	250	210		

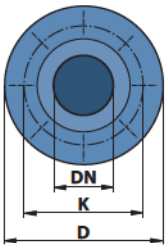

FLANGES

MODEL	PORTS		DIMENSIONS mm												kg *
Three-phase	DN1	DN2	a	f	h	h1	h2	h3	n	n1	n2	w	m	s	3~
F 65/250C	80	65	100	796	450	200	250	15	369	318	360	269.5	305	18.5	**210.0**
F 65/250B				847											**230.0**
F 65/250A				847											**230.0**
F 80/200B	100	80	125	824	430			25	360						**212.0**
F 80/200A				875											**222.5**
F 80/250B				872	480		280	12	380						**245.0**
F 80/250A				1015	620	250		55	490	400	490	294	350	24	**497.0**
F 100/200C	125	100		824	480	200	280	0	391	318	360	269.5	305	18.5	**208.5**
F 100/200B				875											**239.0**
F 100/200A				875											**240.0**
F 100/250B			140	1036	620	250	280	45	490	400	490	300	350	24	**498.5**
F 100/250A															**498.5**

(*weight includes counterflanges)

COUNTERFLANGES

DN FLANGES	F COUNTERFLANGES	D mm	K mm	HOLES N°	HOLES Ø (mm)
32	**1¼"**	140	100	4	18
40	**1½"**	150	110		
50	**2"**	165	125		
65	**2½"**	185	145		
80	**3"**	200	160	8	
100	**4"**	220	180		
125	**5"**	250	210		

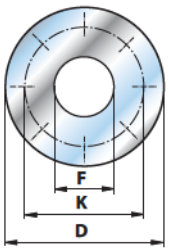

ABSORPTION

MODEL	VOLTAGE (single-phase)	
Single-phase	230 V	240 V
Fm 32/160C	**11.0** A	**10.0** A
Fm 32/160B	**15.0** A	**13.8** A
Fm 40/160C	**15.0** A	**13.8** A
Fm 50/125C	**15.0** A	**13.8** A

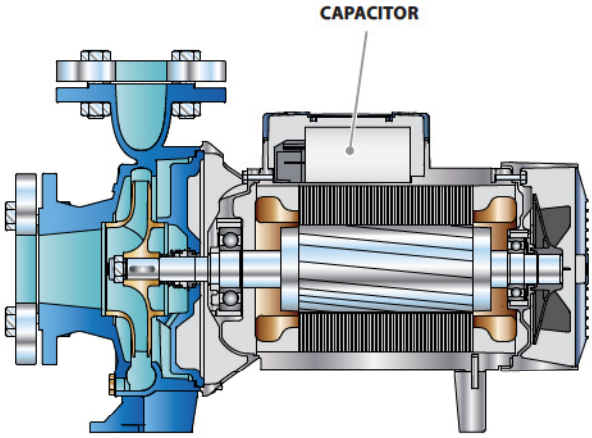

Single-phase version

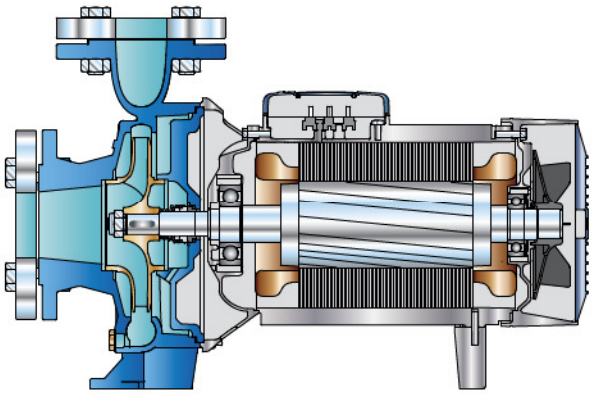

Three-phase version

MODEL	VOLTAGE (three-phase)		
Three-phase	230÷240 V	400÷415 V	690÷720 V
F 32/160C	**7.5** A	**4.3** A	**2.5** A
F 32/160B	**10.0** A	**5.8** A	**3.4** A
F 32/160A	**12.0** A	**7.3** A	**4.2** A
F 32/200C	**17.9** A	**10.3** A	**5.9** A
F 32/200B	–	**11.7** A	**6.7** A
F 32/200A	–	**14.9** A	**8.6** A
F 32/200BH	**12.6** A	**7.3** A	**4.2** A
F 32/200AH	**15.4** A	**8.9** A	**5.1** A
F 40/160C	**9.9** A	**5.7** A	**3.3** A
F 40/160B	**12.0** A	**6.9** A	**4.0** A
F 40/160A	**17.2** A	**9.9** A	**5.7** A
F 40/200B	–	**12.6** A	**7.3** A
F 40/200A	–	**15.6** A	**9.0** A
F 40/250C	–	**21.0** A	**12.1** A
F 40/250B	–	**23.5** A	**13.6** A
F 40/250A	–	**30.5** A	**17.6** A
F 50/125C	**9.4** A	**5.4** A	**3.1** A
F 50/125B	**12.0** A	**6.9** A	**4.0** A
F 50/125A	**16.3** A	**9.4** A	**5.4** A
F 50/160C	**15.8** A	**9.1** A	**5.3** A
F 50/160B	–	**12.3** A	**7.1** A
F 50/160A	–	**15.5** A	**8.9** A
F 50/200C	–	**23** A	**13.3** A
F 50/200B	–	**29.5** A	**17** A
F 50/200A	–	**34.5** A	**20** A
F 50/200AR	–	**41.5** A	**24** A
F 50/250D	–	**17.2** A	**9.9** A
F 50/250C	–	**21.0** A	**12.0** A
F 50/250B	–	**27.0** A	**15.6** A
F 50/250A	–	**34.0** A	**19.6** A
F 50/250AR	–	**41.0** A	**24.0** A
F 65/125C	**17.5** A	**10.0** A	**5.8** A
F 65/125B	–	**12.0** A	**7.0** A
F 65/125A	–	**16.5** A	**9.5** A
F 65/160C	–	**19.0** A	**11.0** A
F 65/160B	–	**23.0** A	**13.5** A
F 65/160A	–	**27.5** A	**16.0** A
F 65/200B	–	**30.0** A	**17.3** A
F 65/200A	–	**35.0** A	**20.2** A
F 65/200AR	–	**41.0** A	**24.0** A
F 65/250C	–	**53.0** A	**31.0** A
F 65/250B	–	**65.0** A	**38.0** A
F 65/250A	–	**79.0** A	**46.0** A
F 80/160D	–	**22.0** A	**13.0** A
F 80/160C	–	**29.0** A	**17.0** A
F 80/160B	–	**34.5** A	**20.0** A
F 80/160A	–	**39.0** A	**22.5** A
F 80/200B	–	**53.0** A	**31.0** A
F 80/200A	–	**65.0** A	**38.0** A
F 80/250B	–	**79.0** A	**46.0** A
F 80/250A	–	**98.0** A	**57.0** A
F 100/160C	–	**31.0** A	**18.0** A
F 100/160B	–	**36.0** A	**21.0** A
F 100/160A	–	**42.0** A	**24.0** A
F 100/200C	–	**53.0** A	**31.0** A
F 100/200B	–	**65.0** A	**38.0** A
F 100/200A	–	**79.0** A	**46.0** A
F 100/250B	–	**98.0** A	**57.0** A
F 100/250A	–	**126.0**A	**73.0** A

PALLETIZATION

MODEL		GROUPAGE				CONTAINER			
		n°	H	kg		n°	H	kg	
Single-phase	Three-phase	pumps	(mm)	1~	3~	pumps	(mm)	1~	3~
Fm 32/160C	F 32/160C	**18**	1430	730	683	**24**	1860	967	905
Fm 32/160B	F 32/160B	**18**	1430	781	707	**24**	1860	1036	936
–	F 32/160A	**18**	1430	–	784	**24**	1860	–	1040
–	F 32/200C	**12**	1535	–	641	**16**	2000	–	849
–	F 32/200B	**12**	1535	–	701	**16**	2000	–	929
–	F 32/200A	**12**	1535	–	749	**16**	2000	–	993
–	F 32/200BH	**12**	1535	–	591	**16**	2000	–	783
–	F 32/200AH	**12**	1535	–	629	**16**	2000	–	833
Fm 40/160C	–	**12**	1400	509	–	**16**	1820	673	–
–	F 40/160C	**18**	1430	–	735	**24**	1860	–	975
–	F 40/160B	**18**	1430	–	809	**24**	1860	–	1073
–	F 40/160A	**12**	1400	–	617	**16**	1820	–	817
–	F 40/200B	**12**	1535	–	749	**16**	2000	–	993
–	F 40/200A	**12**	1535	–	821	**16**	2000	–	1089
–	F 40/250C	**6**	1200	–	635	**9**	1730	–	944
–	F 40/250B	**6**	1200	–	671	**9**	1730	–	998
–	F 40/250A	**6**	1200	–	767	**9**	1730	–	1142
Fm 50/125C	–	**18**	1430	820	–	**24**	1860	1088	–
–	F 50/125C	**12**	1400	–	498	**16**	1820	–	659
–	F 50/125B	**18**	1430	–	810	**24**	1860	–	1075
–	F 50/125A	**12**	1535	–	625	**16**	2000	–	828
–	F 50/160C	**12**	1535	–	677	**16**	2000	–	897
–	F 50/160B	**12**	1535	–	744	**16**	2000	–	987
–	F 50/160A	**12**	1535	–	793	**16**	2000	–	1052
–	F 50/200C	**6**	1200	–	653	**9**	1730	–	971
–	F 50/200B	**6**	1200	–	785	**9**	1730	–	1169
–	F 50/200A	**6**	1200	–	827	**9**	1730	–	1232
–	F 50/200AR	**6**	1380	–	899	**9**	200	–	1340
–	F 50/250D	**6**	1200	–	653	**9**	1730	–	971
–	F 50/250C	**6**	1200	–	697	**9**	1730	–	1037
–	F 50/250B	**6**	1200	–	794	**9**	1730	–	1183
–	F 50/250A	**6**	1200	–	893	**9**	1730	–	1331
–	F 50/250AR	**6**	1380	–	947	**9**	2000	–	1412
–	F 65/125C	**12**	1535	–	769	**16**	2000	–	1020
–	F 65/125B	**12**	1535	–	818	**16**	2000	–	1085
–	F 65/125A	**12**	1535	–	905	**16**	2000	–	1201
–	F 65/160C	**6**	1200	–	617	**9**	1730	–	917
–	F 65/160B	**6**	1200	–	656	**9**	1730	–	976
–	F 65/160A	**6**	1200	–	755	**9**	1730	–	1018
–	F 65/200B	**6**	1200	–	785	**9**	1730	–	1169
–	F 65/200A	**6**	1200	–	767	**9**	1730	–	1142
–	F 65/200AR	**6**	1380	–	936	**9**	2000	–	1395
–	F 65/250C	**1**	450	–	227	–	–	–	–
–	F 65/250B	**1**	450	–	247	–	–	–	–
–	F 65/250A	**1**	450	–	247	–	–	–	–
–	F 80/160D	**6**	1200	–	686	**9**	1730	–	1021
–	F 80/160C	**6**	1380	–	773	**9**	2000	–	1151
–	F 80/160B	**6**	1380	–	878	**9**	2000	–	1309
–	F 80/160A	**6**	1380	–	935	**9**	2000	–	1394
–	F 80/200B	**1**	450	–	229	–	–	–	–
–	F 80/200A	**1**	450	–	240	–	–	–	–
–	F 80/250B	**1**	450	–	262	–	–	–	–
–	F 80/250A	**1**	770	–	514	–	–	–	–
–	F 100/160C	**6**	1380	–	851	**9**	2000	–	1256
–	F 100/160B	**6**	1380	–	939	**9**	2000	–	1437
–	F 100/160A	**6**	1380	–	1007	**9**	2000	–	1502
–	F 100/200C	**1**	450	–	226	–	–	–	–
–	F 100/200B	**1**	450	–	256	–	–	–	–
–	F 100/200A	**1**	450	–	257	–	–	–	–
–	F 100/250B	**1**	770	–	516	–	–	–	–
–	F 100/250A	**1**	770	–	516	–	–	–	–

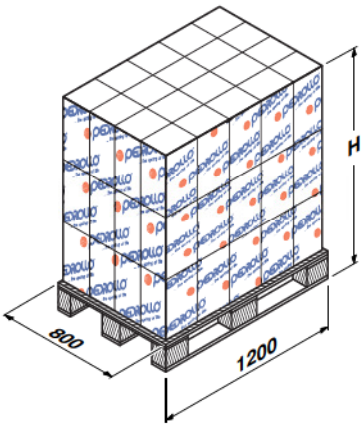

Stainless steel standardised "EN 733" pumps

PERFORMANCE RANGE

- Flow rate up to **2200 l/min** (132 m^3/h)
- Head up to **38 m**

APPLICATION LIMITS

- Manometric suction lift up to **7 m**
- Liquid temperature between **-10 °C** and **+90 °C**
- Ambient temperature between **-10 °C** and **+40 °C**
- Max. pressure in pump body **10 bar** (PN10)
- Continuous service **S1**

CONSTRUCTION AND SAFETY STANDARDS

EN 60034-1
IEC 60034-1
CEI 2-3

Pump body dimensions in compliance with: **EN 733**

CERTIFICATIONS

АИ30

INSTALLATION AND USE

- Water supply
- Pressure boosting
- Irrigation
- Water circulation in climatisation sets
- Cleaning sets
- Firefighting sets
- Industrial applications
- Agricultural applications

Suitable for use with clean, aggressive liquids that are chemically compatible with the materials from which the pump is made.
The pump should be installed in an enclosed environment, or at least sheltered from inclement weather.

OPTIONALS AVAILABLE ON REQUEST

- Special mechanical seal
- Other voltages or 60 Hz frequency
- Compatibility with hotter or colder liquids
- Compatibility with hotter or colder ambients

GUARANTEE

2 years subject to terms and conditions

PERFORMANCE RANGE **50 Hz** **n= 2900 1/min** HS= 0 m

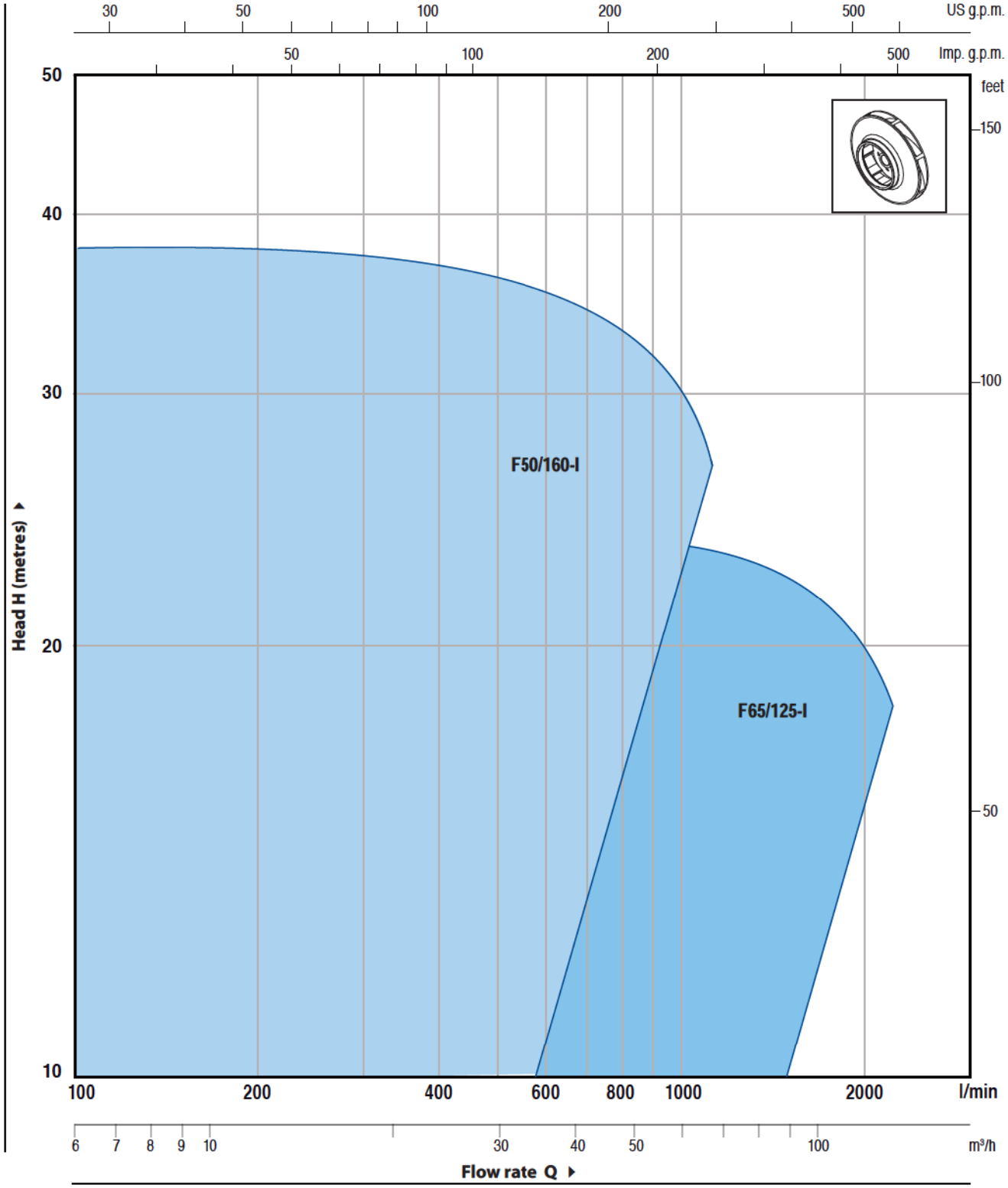

F50/160-I

CHARACTERISTIC CURVES AND PERFORMANCE DATA

50 Hz n= 2900 1/min HS= 0 m

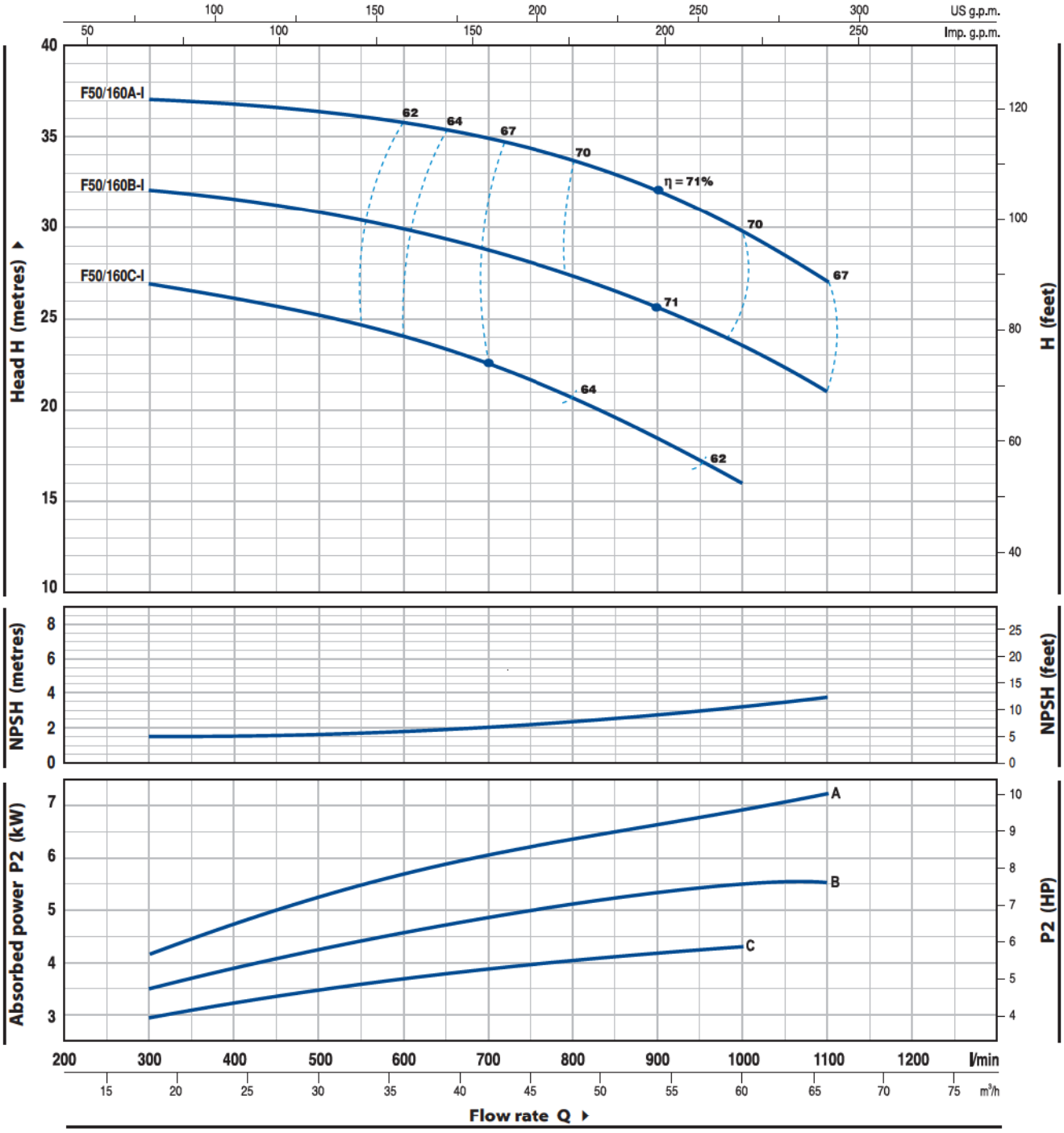

MODEL	POWER		Q m³/h	0	18	24	30	36	42	48	54	60	66
Three-phase	kW	HP	Q l/min	**0**	**300**	**400**	**500**	**600**	**700**	**800**	**900**	**1000**	**1100**
F 50/160C-I	4	5.5		27	27	26.5	25	24.5	23	20	18.5	16	
F 50/160B-I	5.5	7.5	**H** metres	33	32	31.7	31	30	29	27	26	24	21
F 50/160A-I	7.5	10		38	37	36.8	36.5	36	34	33	32	30	27

Q = Flow rate **H** = Total manometric head **HS** = Suction height

Tolerance of characteristic curves in compliance with EN ISO 9906 App. A.

CHARACTERISTIC CURVES AND PERFORMANCE DATA

50 Hz n= 2900 1/min HS= 0 m

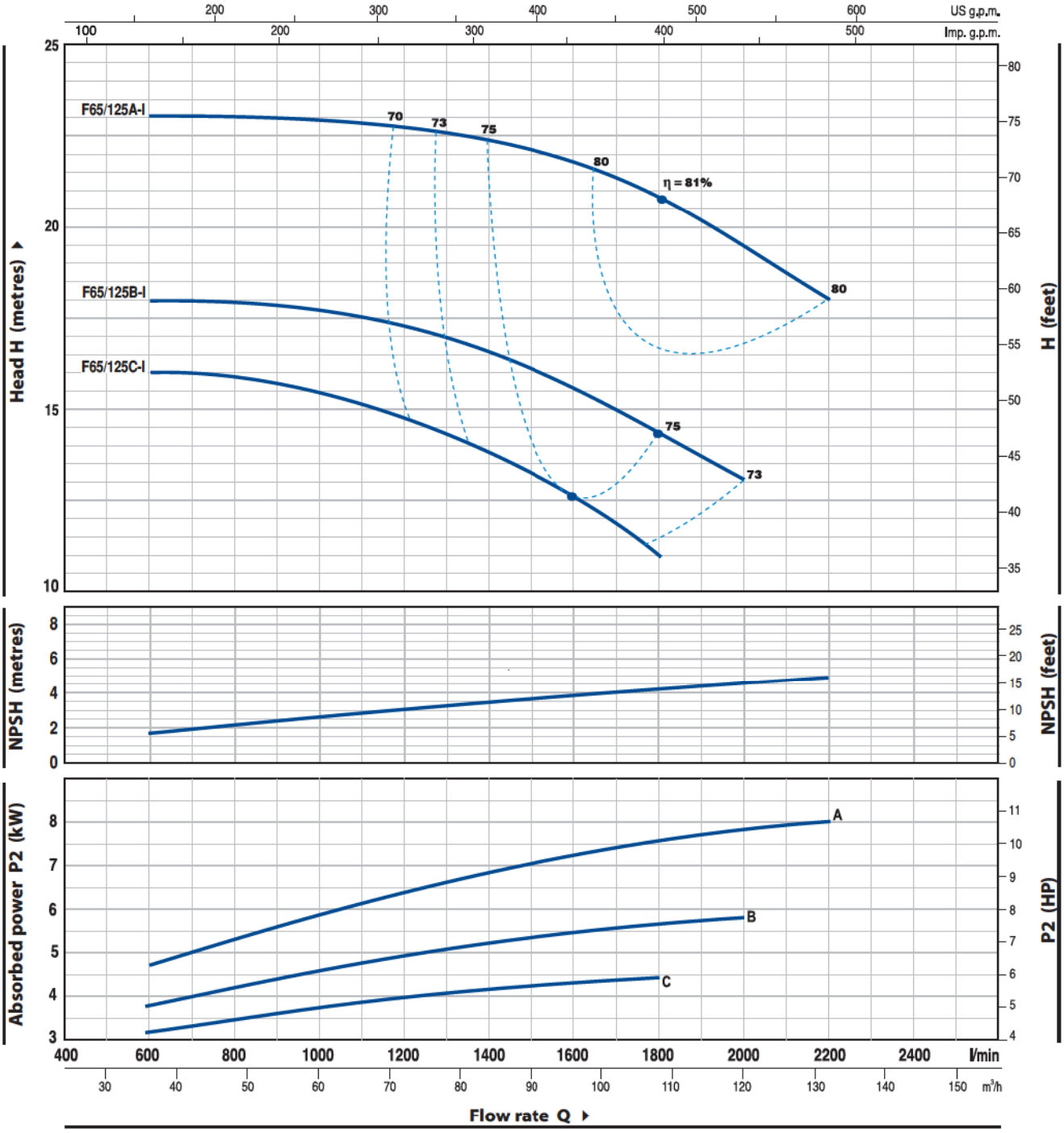

MODEL	POWER		Q m³/h	0	36	48	60	72	84	96	108	120	132
Three-phase	kW	HP	Q l/min	**0**	**600**	**800**	**1000**	**1200**	**1400**	**1600**	**1800**	**2000**	**2200**
F 65/125C-I	4	5.5		16	16	16	15.5	14.5	13.5	12.5	11		
F 65/125B-I	5.5	7.5	**H** metres	18	18	18	18	17	16.5	15.5	14.5	13	
F 65/125A-I	7.5	10		23	23	23	23	22.5	22.5	22	21	19.5	18

Q = Flow rate **H** = Total manometric head **HS** = Suction height

Tolerance of characteristic curves in compliance with EN ISO 9906 App. A.

POS.	COMPONENT	CONSTRUCTION CHARACTERISTICS
1	**PUMP BODY**	Stainless steel AISI 316, complete with flanged suction and delivery ports
2	**BODY BACKPLATE**	Stainless steel AISI 316
4	**IMPELLER**	Stainless steel AISI 316
5	**MOTOR SHAFT**	Stainless steel AISI 316

6 MECHANICAL SEAL

Pump Model	*Seal Model*	*Shaft Diameter*	*Materials* Stationary ring	Rotational ring	Elastomer
F50/160-I **F65/125-I**	**FN-24SV**	**Ø 24** mm	Silicon carbide	Silicon carbide	Viton

7 BEARINGS

Pump	*Model*
F50/160-I **F65/125-I**	**6307 ZZ - C3 / 6206 ZZ - C3**

9 ELECTRIC MOTOR

F: three-phase 230/400 V - 50 Hz for 4 kW.
400/690 V - 50 Hz from 5.5 to 7.5 kW.

➡ **Pumps fitted with the three-phase motor option offer IE2 (IEC 60034-30) class high performance**

– Insulation: F class.
– Protection: IP 55.

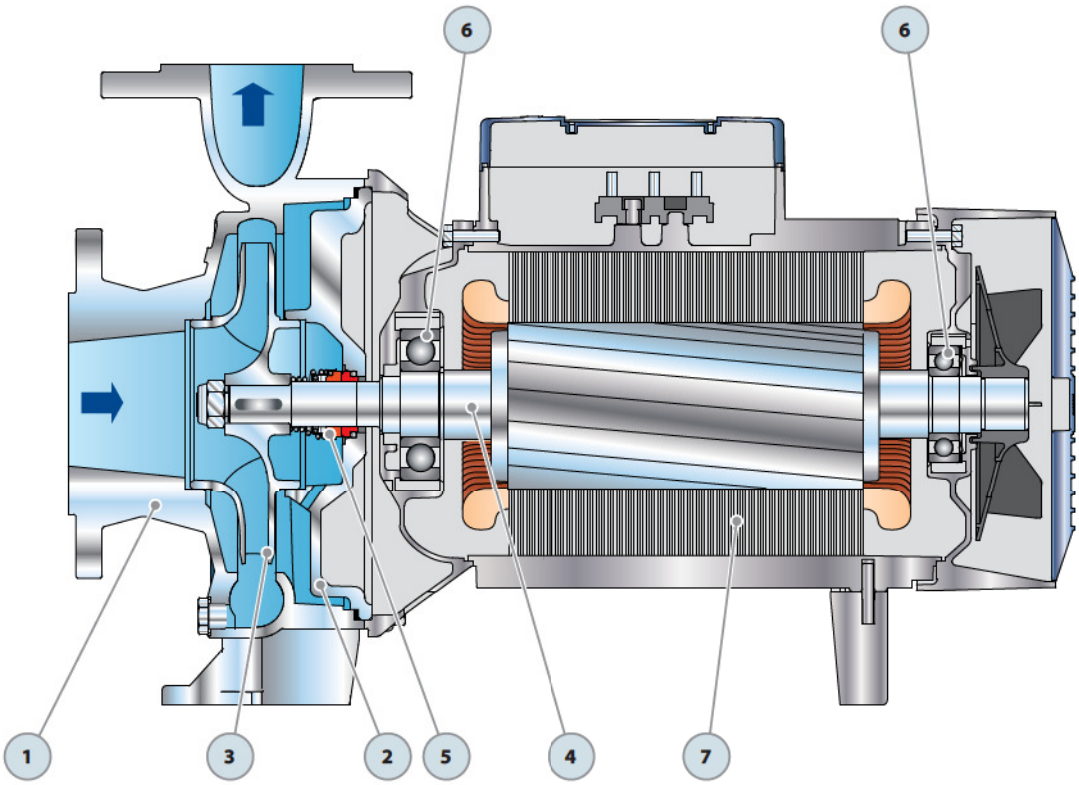

DIMENSIONS AND WEIGHT

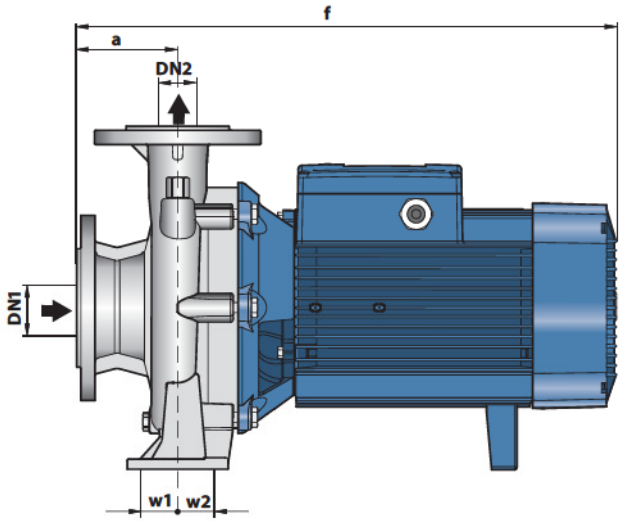

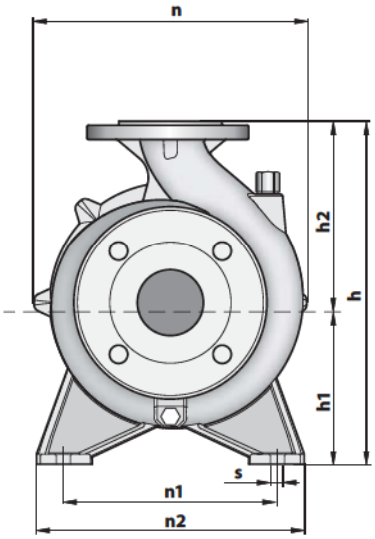

MODEL	PORTS		DIMENSIONS mm											Kg
Three-phase	DN1	DN2	a	f	h	h1	h2	n	n1	n2	w1	w2	s	3~
F 50/160C-I	65	50	100	489	340	160	180	269	212	265	35	35	14	**50.2**
F 50/160B-I				535										**54.0**
F 50/160A-I														**65.5**
F 65/125C-I	80	65		511				291		280	47.5	47.5		**62.6**
F 65/125B-I				557										**67.7**
F 65/125A-I														**72.9**

ABSORPTION

MODEL	VOLTAGE (three-phase)		
Three-phase	230÷240 V	400÷415 V	690÷720 V
F 50/160C-I	**15.8** A	**9.1** A	**5.3** A
F 50/160B-I	–	**12.3** A	**7.1** A
F 50/160A-I	–	**15.5** A	**8.9** A
F 65/125C-I	**17.5** A	**10.0** A	**5.8** A
F 65/125B-I	–	**12.0** A	**7.0** A
F 65/125A-I	–	**16.5** A	**9.5** A

PALLETIZATION

MODEL	GROUPAGE			CONTAINER		
Threw	n° pumps	H (mm)	kg 3~	n° pumps	H (mm)	kg 3~
F 50/160C-I	**12**	1535	619	**16**	2000	820
F 50/160B-I	**12**	1535	665	**16**	2000	881
F 50/160A-I	**12**	1535	802	**16**	2000	1064
F 65/125C-I	**12**	1535	768	**16**	2000	1018
F 65/125B-I	**12**	1535	829	**16**	2000	1100
F 65/125A-I	**12**	1535	891	**16**	2000	1183

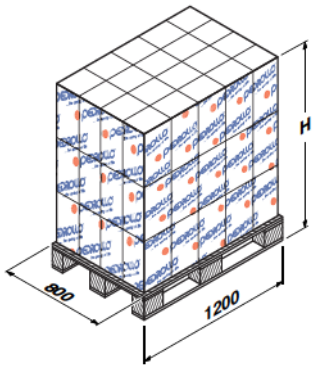

FG

Standardised "EN 733" centrifugal pumps

PERFORMANCE RANGE

- Flow rate up to **6000 l/min** (360 m^3/h)
- Head up to **95 m**

APPLICATION LIMITS

- Manometric suction lift up to **7 m**
- Liquid temperature between **-10 °C** and **+90 °C**
- Max. pressure in pump body **10 bar** (PN10)

CONSTRUCTION AND SAFETY STANDARDS

EN 733

CERTIFICATIONS

INSTALLATION AND USE

- Water supply
- Pressure boosting
- Irrigation
- Water circulation in climatisation sets
- Cleaning sets
- Firefighting sets
- Industrial applications
- Agricultural applications

OPTIONALS AVAILABLE ON REQUEST

- Special mechanical seal
- Counterflange
- Pumps compatible with 60 Hz motors
- Compatibility with hotter or colder liquids
- Compatibility with hotter or colder ambients

GUARANTEE

2 years subject to terms and conditions

DIMENSIONS AND WEIGHT

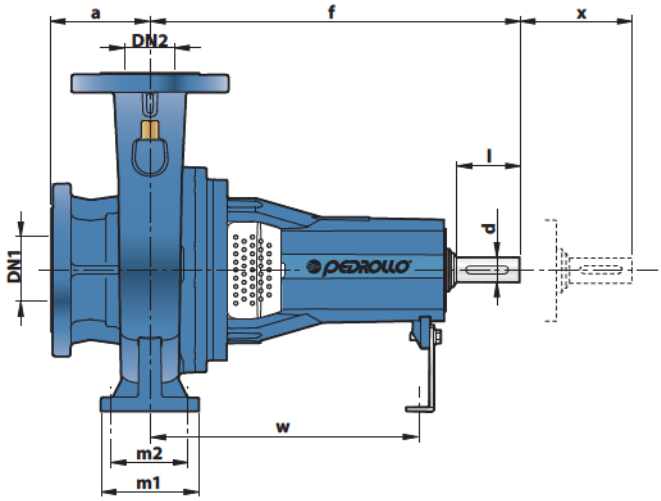

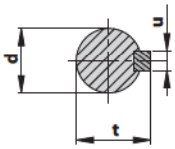

SHAFT DIMENSIONS
mm

d	u	t
24 k6	8	27
32 k6	10	35

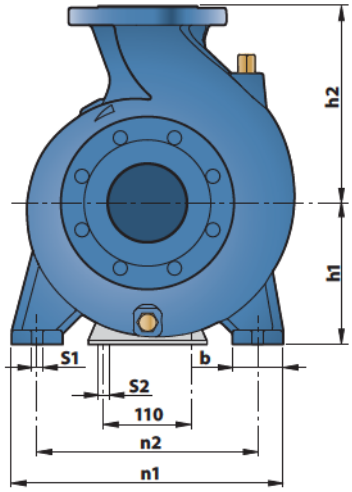

DN FLANGES	D mm	K mm	HOLES N°	HOLES Ø (mm)
32	140	100	4	18
40	150	110		
50	165	125		
65	185	145		
80	200	160	8	
100	220	180		
125	250	210		

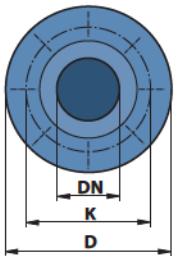

FLANGES

MODEL	PORTS DN1	PORTS DN2	a	f	h1	h2	b	m1	m2	n1	n2	s1	s2	w	x	d	l	kg
			DIMENSIONS mm															
FG 32/160	50	32	80	360	132	160	50	100	70	240	190	14	14	260	100	24	50	**30.9**
FG 32/200					160	180	55	95		245								**32.0**
FG 32/200H					160	180	55											**31.4**
FG 40/160	65	40			132	160	50	100		240								**29.0**
FG 40/200			100		160	180	55			265	212							**35.6**
FG 40/250					180	225	65	125	95	320	250							**44.4**
FG 50/125	65	50			132	160	50	100	70	240	190							**28.9**
FG 50/160					160	180	55			265	212							**32.8**
FG 50/200					160	200	50											**41.3**
FG 50/250					180	225	65	125	95	320	250							**46.6**
FG 65/125	80	65			160	180	65			280	212							**40.1**
FG 65/160					160	200	65											**41.4**
FG 65/200					180	225	65			320	250				140			**46.5**
FG 65/250				470	200	250	80	160	120	360	280	18		340		32	80	**67.7**
FG 80/160	100	80	125	360	180	225	65	125	95	320	250	14		260		24	50	**45.2**
FG 80/200				470	180	250	65			345	280			340		32	80	**61.4**
FG 80/250					200	280	80	160	120	400	315	18						**76.8**
FG 100/160	125	100		360	200	280	80			360	280			260		24	50	**52.8**
FG 100/200				470	200	280	80							340		32	80	**74.3**
FG 100/250			140		225	280	80			400	315							**84.0**

PERFORMANCE RANGE

HS= 0 m

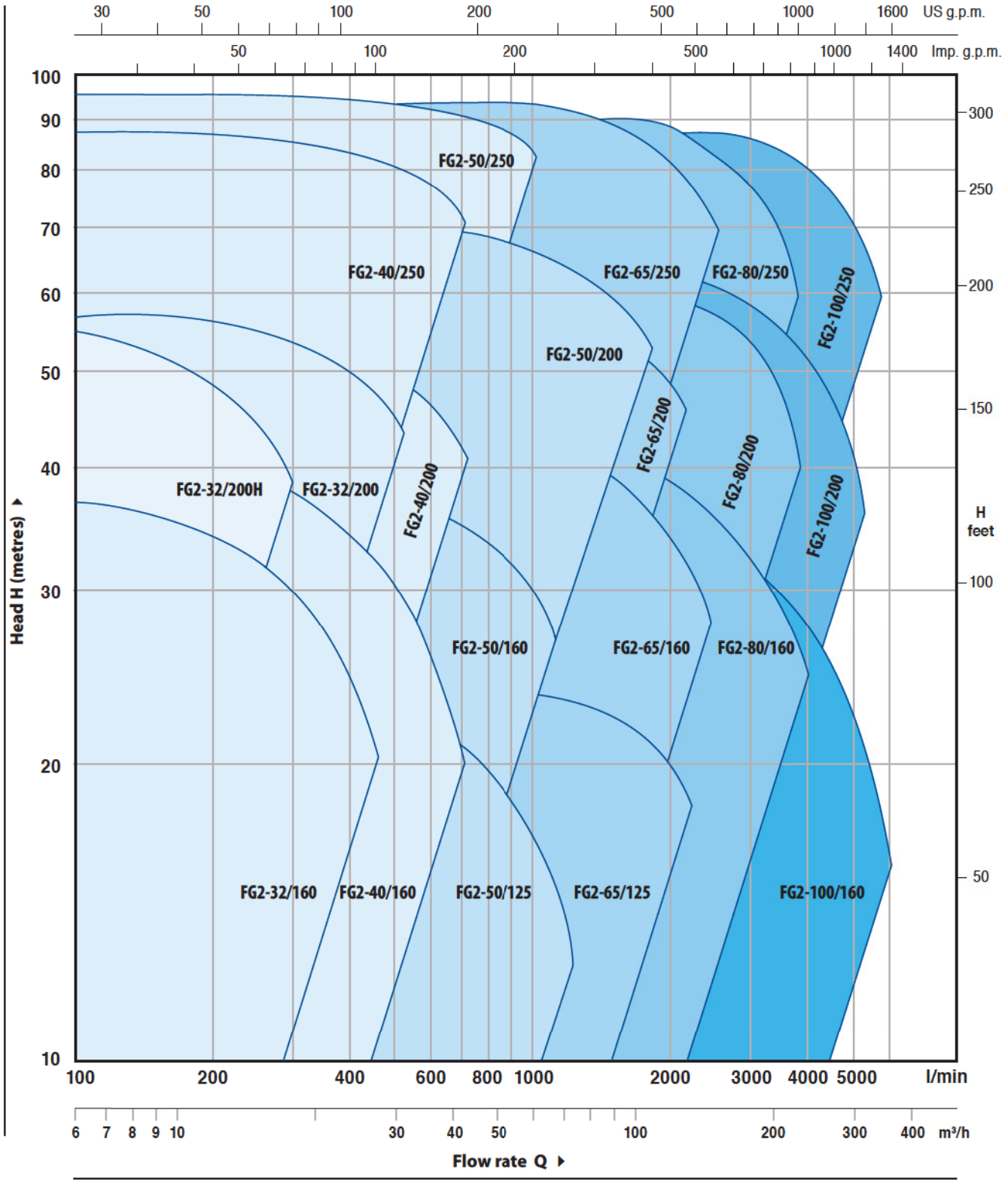

PERFORMANCE DATA

n= 2900 1/min HS= 0 m

MODEL	MOTOR PAIRING		PERFORMANCE	
pump	kW	HP	Q l/min	H metres
FG2 32/160C	1.5	2	100 ÷ 350	24 ÷ 14
FG2 32/160B	2.2	3	100 ÷ 400	30 ÷ 17
FG2 32/160A	3	4	100 ÷ 450	37 ÷ 24
FG2 32/200C	4	5.5	100 ÷ 450	44 ÷ 31.5
FG2 32/200B	5.5	7.5	100 ÷ 500	51 ÷ 36
FG2 32/200A	7.5	10	100 ÷ 500	57 ÷ 44
FG2 32/200BH	3	4	100 ÷ 300	45 ÷ 37
FG2 32/200AH	4	5.5	100 ÷ 320	55 ÷ 44
FG2 40/160C	2.2	3	100 ÷ 600	27 ÷ 14
FG2 40/160B	3	4	100 ÷ 600	32 ÷ 20
FG2 40/160A	4	5.5	100 ÷ 700	38 ÷ 20
FG2 40/200B	5.5	7.5	100 ÷ 700	47 ÷ 28
FG2 40/200A	7.5	10	100 ÷ 700	55 ÷ 41
FG2 40/250C	9.2	12.5	100 ÷ 700	64 ÷ 47
FG2 40/250B	11	15	100 ÷ 700	71 ÷ 55
FG2 40/250A	15	20	100 ÷ 700	88 ÷ 72
FG2 50/125C	2.2	3	300 ÷ 1200	17.5 ÷ 6
FG2 50/125B	3	4	300 ÷ 1200	20.7 ÷ 9
FG2 50/125A	4	5.5	300 ÷ 1200	23.5 ÷ 13
FG2 50/160C	4	5.5	300 ÷ 1000	27 ÷ 16
FG2 50/160B	5.5	7.5	300 ÷ 1100	32 ÷ 21
FG2 50/160A	7.5	10	300 ÷ 1100	37 ÷ 27
FG2 50/200C	11	15	400 ÷ 1700	44 ÷ 30
FG2 50/200B	15	20	400 ÷ 1700	52 ÷ 38
FG2 50/200A	18.5	25	400 ÷ 1800	61 ÷ 45
FG2 50/200AR	22	30	400 ÷ 1800	69 ÷ 53
FG2 50/250D	9.2	12.5	300 ÷ 900	51 ÷ 32
FG2 50/250C	11	15	300 ÷ 900	59 ÷ 42
FG2 50/250B	15	20	300 ÷ 1000	72 ÷ 59
FG2 50/250A	18.5	25	300 ÷ 1000	85 ÷ 73
FG2 50/250AR	22	30	300 ÷ 1000	95 ÷ 83
FG2 65/125C	4	5.5	600 ÷ 1800	16 ÷ 11
FG2 65/125B	5.5	7.5	600 ÷ 2000	18 ÷ 13
FG2 65/125A	7.5	10	600 ÷ 2200	23 ÷ 18
FG2 65/160C	9.2	12.5	600 ÷ 2200	32 ÷ 22
FG2 65/160B	11	15	600 ÷ 2400	36.5 ÷ 23
FG2 65/160A	15	20	600 ÷ 2400	40.5 ÷ 28
FG2 65/200B	15	20	400 ÷ 2000	45 ÷ 35.5
FG2 65/200A	18.5	25	400 ÷ 2100	51 ÷ 40
FG2 65/200AR	22	30	400 ÷ 2100	57 ÷ 46
FG2 65/250C	30	40	400 ÷ 2350	76 ÷ 53
FG2 65/250B	37	50	400 ÷ 2500	87 ÷ 62
FG2 65/250A	45	60	400 ÷ 2600	94.5 ÷ 68

MODEL	MOTOR PAIRING		PERFORMANCE	
pump	kW	HP	Q l/min	H metres
FG2 80/160D	11	15	500 ÷ 4000	25 ÷ 10
FG2 80/160C	15	20	500 ÷ 4000	30 ÷ 15
FG2 80/160B	18.5	25	500 ÷ 4000	35 ÷ 20
FG2 80/160A	22	30	500 ÷ 4000	40 ÷ 25
FG2 80/200B	30	40	500 ÷ 3650	56 ÷ 34.5
FG2 80/200A	37	50	500 ÷ 3900	62 ÷ 40
FG2 80/250B	45	60	600 ÷ 3600	77 ÷ 54
FG2 80/250A	55	75	600 ÷ 3900	88.5 ÷ 60
FG2 100/160C	15	20	1000 ÷ 5000	28 ÷ 12
FG2 100/160B	18.5	25	1000 ÷ 5500	32 ÷ 13
FG2 100/160A	22	30	1000 ÷ 6000	35 ÷ 15
FG2 100/200C	30	40	800 ÷ 4650	51 ÷ 28
FG2 100/200B	37	50	800 ÷ 4900	57 ÷ 33
FG2 100/200A	45	60	800 ÷ 5250	63 ÷ 38
FG2 100/250B	55	75	800 ÷ 5150	73 ÷ 48
FG2 100/250A	75	100	800 ÷ 5750	88 ÷ 58

PERFORMANCE RANGE

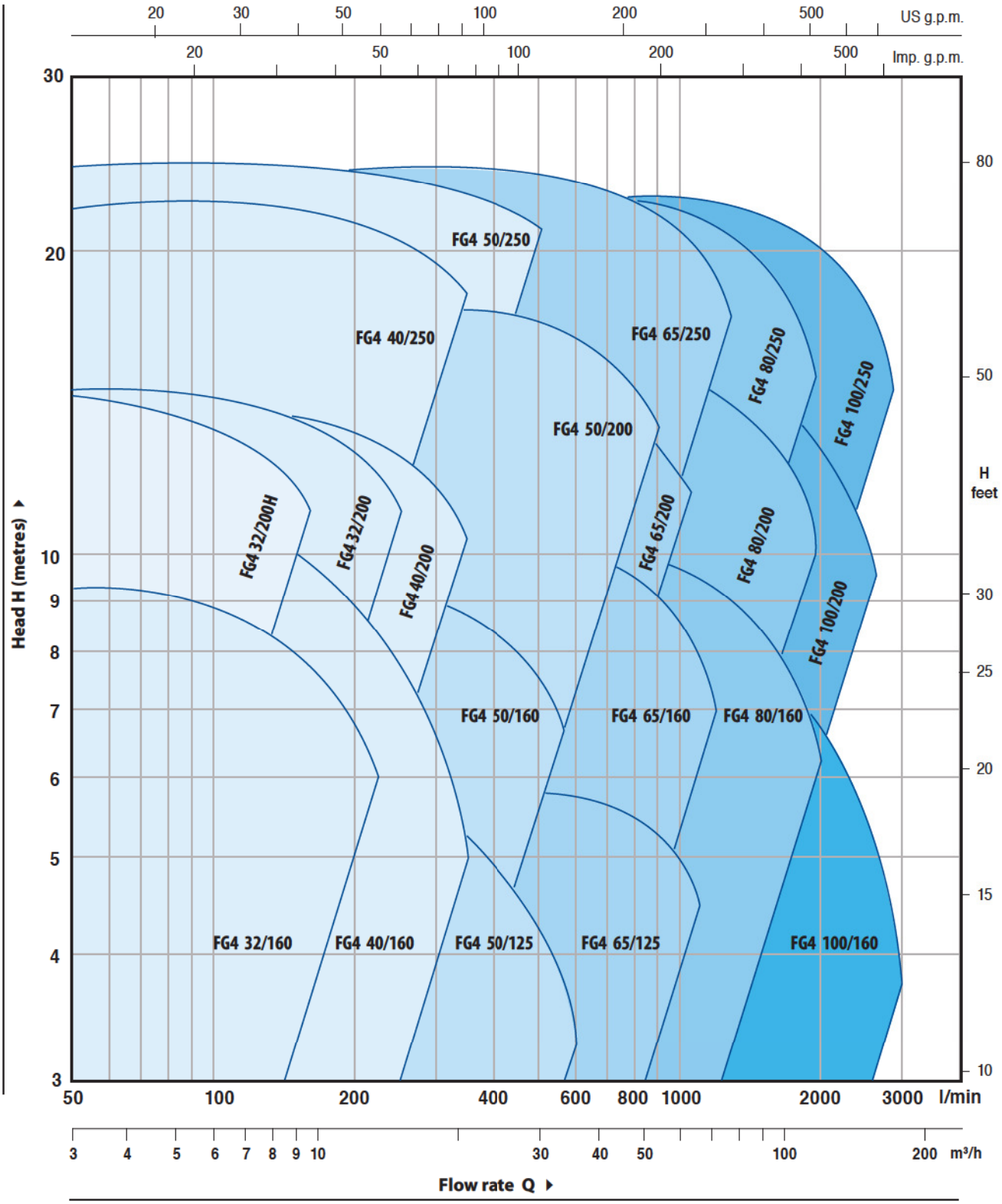

PERFORMANCE DATA

n= 1450 1/min HS= 0 m

MODEL	MOTOR PAIRING		PERFORMANCE	
pump	kW	HP	Q l/min	H metres
FG4 32/160C	0.25	0.33	50 ÷ 175	6 ÷ 3.5
FG4 32/160B	0.37	0.5	50 ÷ 200	7.5 ÷ 4
FG4 32/160A	0.37	0.5	50 ÷ 225	9 ÷ 6
FG4 32/200C	0.55	0.75	50 ÷ 225	11 ÷ 8
FG4 32/200B	0.75	1	50 ÷ 250	12.5 ÷ 9
FG4 32/200A	1.1	1.5	50 ÷ 250	14 ÷ 11
FG4 32/200BH	0.55	0.75	50 ÷ 150	11 ÷ 9
FG4 32/200AH	0.55	0.75	50 ÷ 160	13.5 ÷ 11
FG4 40/160C	0.37	0.5	50 ÷ 300	6.5 ÷ 3.5
FG4 40/160B	0.37	0.5	50 ÷ 300	8 ÷ 5
FG4 40/160A	0.55	0.75	50 ÷ 350	9.5 ÷ 5
FG4 40/200B	0.75	1	50 ÷ 350	11.5 ÷ 7
FG4 40/200A	1.1	1.5	50 ÷ 350	13.5 ÷ 10
FG4 40/250C	1.1	1.5	50 ÷ 350	16 ÷ 11.5
FG4 40/250B	1.5	2	50 ÷ 350	17.5 ÷ 13.5
FG4 40/250A	2.2	3	50 ÷ 350	22 ÷ 18
FG4 50/125C	0.37	0.5	150 ÷ 600	4 ÷ 1.5
FG4 50/125B	0.55	0.75	150 ÷ 600	5 ÷ 2
FG4 50/125A	0.55	0.75	150 ÷ 600	6 ÷ 3
FG4 50/160C	0.55	0.75	150 ÷ 500	7 ÷ 4
FG4 50/160B	0.75	1	150 ÷ 550	8 ÷ 5
FG4 50/160A	1.1	1.5	150 ÷ 550	9 ÷ 7
FG4 50/200C	1.5	2	200 ÷ 850	11 ÷ 7.5
FG4 50/200B	2.2	3	200 ÷ 850	13 ÷ 9.5
FG4 50/200A	2.2	3	200 ÷ 900	15 ÷ 11
FG4 50/200AR	3	4	200 ÷ 900	17 ÷ 13
FG4 50/250D	1.1	1.5	150 ÷ 450	12.5 ÷ 8
FG4 50/250C	1.5	2	150 ÷ 450	14.5 ÷ 10.5
FG4 50/250B	2.2	3	150 ÷ 500	18 ÷ 14.5
FG4 50/250A	2.2	3	150 ÷ 500	21 ÷ 18
FG4 50/250AR	3	4	150 ÷ 500	24 ÷ 21
FG4 65/125C	0.55	0.75	300 ÷ 900	4 ÷ 2.5
FG4 65/125B	0.75	1	300 ÷ 1000	4.5 ÷ 3
FG4 65/125A	1.1	1.5	300 ÷ 1100	5.5 ÷ 4.5
FG4 65/160C	1.1	1.5	300 ÷ 1100	8 ÷ 5.5
FG4 65/160B	1.5	2	300 ÷ 1200	9 ÷ 5.5
FG4 65/160A	2.2	3	300 ÷ 1200	10 ÷ 7
FG4 65/200B	2.2	3	200 ÷ 1000	11 ÷ 9
FG4 65/200A	2.2	3	200 ÷ 1050	12.5 ÷ 10
FG4 65/200AR	3	4	200 ÷ 1050	14.3 ÷ 11.5
FG4 65/250C	3	4	200 ÷ 1175	19 ÷ 13
FG4 65/250B	4	5.5	200 ÷ 1250	21.5 ÷ 15.5
FG4 65/250A	5.5	7.5	200 ÷ 1300	23.5 ÷ 17

MODEL	MOTOR PAIRING		PERFORMANCE	
pump	kW	HP	Q l/min	H metres
FG4 80/160D	1.5	2	250 ÷ 2000	6 ÷ 2.5
FG4 80/160C	2.2	3	250 ÷ 2000	7.5 ÷ 3.5
FG4 80/160B	2.2	3	250 ÷ 2000	8.5 ÷ 5
FG4 80/160A	3	4	250 ÷ 2000	10 ÷ 6
FG4 80/200B	4	5.5	250 ÷ 1825	14 ÷ 8.5
FG4 80/200A	5.5	7.5	250 ÷ 1950	15.5 ÷ 10
FG4 80/250B	5.5	7.5	300 ÷ 1800	19 ÷ 13.5
FG4 80/250A	7.5	10	300 ÷ 1950	22 ÷ 15
FG4 100/160C	2.2	3	500 ÷ 2500	7 ÷ 3
FG4 100/160B	3	4	500 ÷ 2750	8 ÷ 3
FG4 100/160A	3	4	500 ÷ 3000	8.5 ÷ 3.5
FG4 100/200C	4	5.5	400 ÷ 2325	12.5 ÷ 7
FG4 100/200B	5.5	7.5	400 ÷ 2450	14 ÷ 8
FG4 100/200A	5.5	7.5	400 ÷ 2625	15.5 ÷ 9.5
FG4 100/250B	7.5	10	400 ÷ 2575	18.5 ÷ 12
FG4 100/250A	9.2	12.5	400 ÷ 2875	22 ÷ 14.5